marantz®

Service Manual Ver. 2

AV Surround Receiver

SR6013

Click here!

On-line service parts list

http://dmedia.dmglobal.com/Document/DocumentDetails/24550

ONLINE PARTS LIST (P5)

WEB owner's manual

NA: http://manuals.marantz.com/SR6013/NA/EN/index.php

EU: http://manuals.marantz.com/SR6013/EU/EN/index.php

AP: http://manuals.marantz.com/SR6013/AP/ZH/index.php

Upload is planned for the time of a future press release.

BEFORE SERVICING THIS UNIT

ELECTRICAL

MECHANICAL

REPAIR INFORMATION

UPDATING

- For purposes of improvement, specifications and design are subject to change without notice.
- Please use this service manual when referring to the operating instructions without fail.
- Some illustrations used in this service manual are slightly different from the actual product.

Please refer to the MODIFICATION NOTICE.

Confidential

BEFORE SERVICING THIS UNIT

SAFETY PRECAUTIONS

NOTE FOR SCHEMATIC DIAGRAM

HANDLING THE SEMICONDUCTOR AND OPTICS

ONLINE PARTS LIST

Accessing the Parts List
Searching Part Numbers or Ref. Numbers
NOTE FOR PARTS LIST

SERIAL NUMBER

Serial Number Organization
SKU Code of this Unit

POST-SERVICE PRECAUTIONS

Initializing this Unit
JIG FOR SERVICING

SAFETY PRECAUTIONS

The following items should be checked for continued protection of the customer and the service technician.

Leakage current check

Before returning the set to the customer, be sure to carry out either (1) a leakage current check or (2) a line to chassis resistance check. If the leakage current exceeds 0.5 milliamps, or if the resistance from chassis to either side of the power cord is less than 460 kohms, the set is defective.
Be sure to test for leakage current with the AC plug in both polarities, in addition, when the set's power is in each state (on, off and standby mode), if applicable.

CAUTION **Please heed the following cautions and instructions during servicing and inspection.**

◎ Heed the cautions!

Cautions which are delicate in particular for servicing are labeled on the cabinets, the parts and the chassis, etc. Be sure to heed these cautions and the cautions described in the handling instructions.

◎ Cautions concerning electric shock!

(1) An AC voltage is impressed on this set, so if you touch internal metal parts when the set is energized, you may get an electric shock. Avoid getting an electric shock, by using an isolating transformer and wearing gloves when servicing while the set is energized, or by unplugging the power cord when replacing parts, for example.
(2) There are high voltage parts inside. Handle with extra care when the set is energized.

◎ Caution concerning disassembly and assembly!

Through great care is taken when parts were manufactured from sheet metal, there may be burrs on the edges of parts. The burrs could cause injury if fingers are moved across them in some rare cases. Wear gloves to protect your hands.

◎ Use only designated parts!

The set's parts have specific safety properties (fire resistance, voltage resistance, etc.). Be sure to use parts which have the same properties for replacement. The burrs have the same properties. In particular, for the important safety parts that are indicated by the ⚠ mark on schematic diagrams and parts lists, be sure to use the designated parts.

◎ Be sure to mount parts and arrange the wires as they were originally placed!

For safety seasons, some parts use tapes, tubes or other insulating materials, and some parts are mounted away from the surface of printed circuit boards. Care should also be taken with the positions of the wires by arranging them and using clamps to keep them away from heating and high voltage parts, so be sure to set everything back as it was originally placed.

◎ Make a safety check after servicing!

Check that all screws, parts and wires removed or disconnected when servicing have been put back in their original positions, check that no serviced parts have deteriorated the area around. Then make an insulation check on the external metal connectors and between the blades of the power plug. And otherwise check that safety is ensured.
(Insulation check procedure)
Unplug the power cord from the power outlet, disconnect the antenna, plugs, etc., and on the power. Using a 500V insulation resistance tester, check that the insulation resistance value between the inplug and the externally exposed metal parts (antenna terminal, headphones terminal, input terminal, etc.) is 1M Ω or greater. If it is less, the set must be inspected and repaired.

CAUTION **Concerning important safety parts**

Many of the electric and the structural parts used in the set have special safety properties. In most cases these properties are difficult to distinguish by sight, and the use of replacement parts with higher ratings (rated power and withstand voltage) does not necessarily guarantee that safety performance will be preserved. Parts with safety properties are indicated as shown below on the wiring diagrams and the parts list in this service manual. Be sure to replace them with the parts which have the designated part number.

(1) Schematic diagrams Indicated by the ⚠ mark.
(2) Parts lists Indicated by the ⚠ mark.
The use of parts other than the designated parts could cause electric shocks, fires or other dangerous situations.

NOTE FOR SCHEMATIC DIAGRAM

WARNING:
Parts indicated by the ⚠ mark have critical characteristics. Use ONLY replacement parts recommended by the manufacturer.

CAUTION:
Before returning the set to the customer, be sure to carry out either (1) a leakage current check or (2) a line to chassis resistance check. If the leakage current exceeds 0.5 milliamps, or if the resistance from chassis to either side of the power cord is less than 460 kohms, the set is defective.

WARNING:
DO NOT return the set to the customer unless the problem is identified and remedied.

NOTICE:
(1) ALL RESISTANCE VALUES IN OHM. k=1,000 OHM / M=1,000,000 OHM
(2) ALL CAPACITANCE VALUES ARE EXPRESSED IN MICRO FARAD, UNLESS OTHERWISE INDICATED. P INDICATES MICRO-MICRO FARAD. N INDICATES NANO FARAD.
(3) EACH VOLTAGE AND CURRENT ARE MEASURED AT NO SIGNAL INPUT CONDITION.
(4) CIRCUIT AND PARTS ARE SUBJECT TO CHANGE WITHOUT PRIOR NOTICE.

HANDLING THE SEMICONDUCTOR AND OPTICS

Electrostatic breakdown of the semi-conductors or optical pickup may occur due to a potential difference caused by electrostatic charge during unpacking or repair work.

1. Ground for Human Body

Be sure to wear a grounding band (1 M ohm) that is properly grounded to remove any static electricity that may be charged on the body.

2. Ground for Workbench

Be sure to place a conductive sheet or copper plate with proper grounding (1 M ohm) on the workbench or other surface, where the semi-conductors are to be placed. Because the static electricity charge on clothing will not escape through the body grounding band, be careful to avoid contacting semi-conductors with your clothing

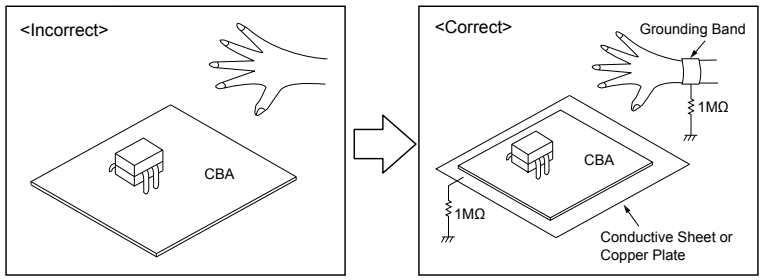

ONLINE PARTS LIST

Accessing the Parts List

(1) Access from the Service Manual

・ Click the URL link on the cover of the service manual.
Examples of display

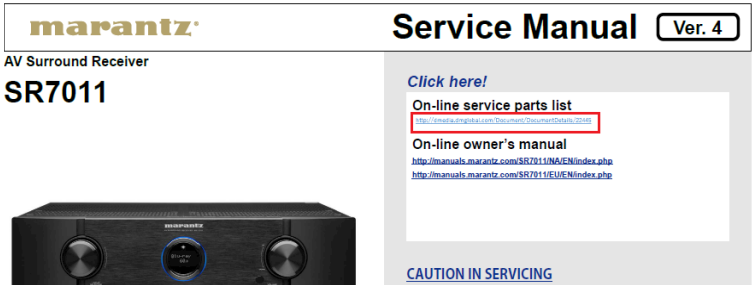

NOTE : If the web browser does not open automatically, copy the URL and paste it into the address bar of the web browser and then press Enter.

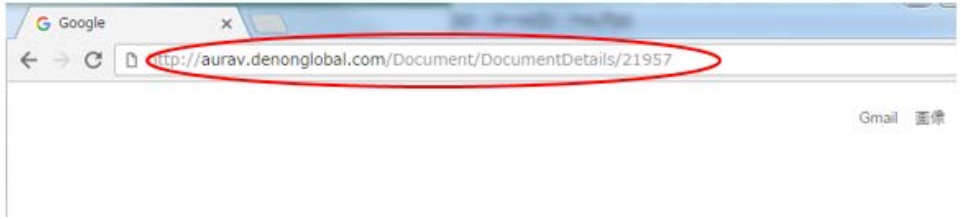

(2) Accessing the Part List from the Model Asset Screen.

・ Display Model Asset from New SDI.

・ Click the section displayed as ▼ Link to Part Lists under the model name.

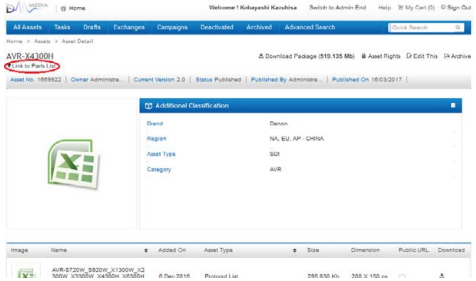

NOTE : If the ▼ Link to Parts List section is not displayed, download the parts table from the Asset list.

Searching Part Numbers or Ref. Numbers

You can search a Parts List for part numbers or Ref. numbers.

(1) Enter the part number or Ref. number in the search window of the Parts List, and press the search button.

(2) The search results are displayed.
The name of the sheet in which the search part is used and the part's line are displayed.

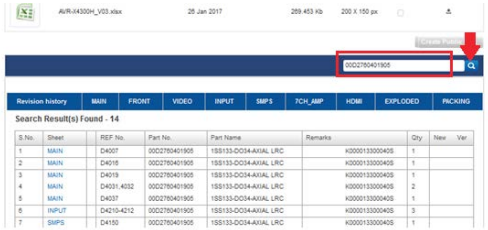

(3) Next, click the "**Sheet**" section of the search results.

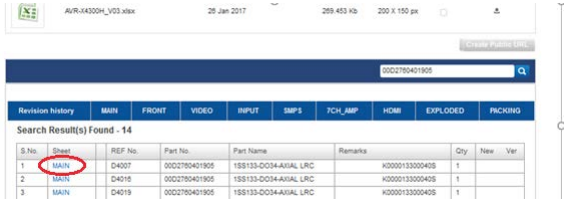

NOTE FOR PARTS LIST

1. Parts indicated by "**nsp**" on this table cannot be supplied.
2. When ordering a part, make a clear distinction between "1" and "I" (i) to avoid mis-supplying.
3. A part ordered without specifying its part number can not be supplied.
4. Part indicated by "**@**" mark is not illustrated in the exploded and packaging view.

WARNING: Parts indicated by the ⚠ mark have critical characteristics. Use ONLY replacement parts recommended by the manufacturer.

SERIAL NUMBER

Serial Number Organization

The 14-digit serial number that contains the code of the manufacturing plant and the manufacturing date.

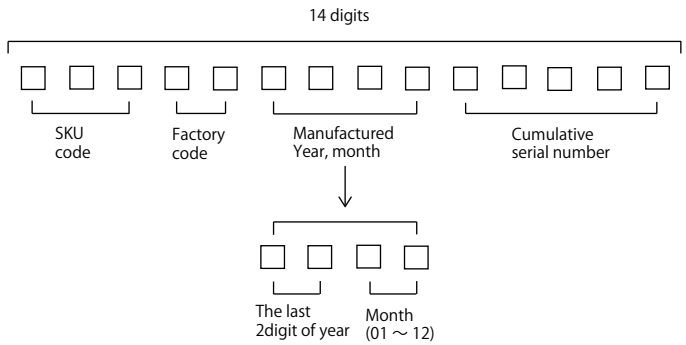

SKU Code of this Unit

Product SKU	SKU Code
SR6013/U1B	BCP
SR6013/N1B	BCQ
SR6013/N1SG	BCT
SR6013/K1B	BCR

POST-SERVICE PRECAUTIONS

Initializing this Unit

Make sure to initialize this unit after replacing the microcomputer or any peripheral equipment, or the digital PCB.

1. Press the power button to turn off the power.
2. While holding down buttons "**TUNER PRESET CH -**" and "**TUNER PRESET CH +**" simultaneously, press the power button to turn on the power.
3. Release the buttons after confirming that the display flashes at 1-second intervals.
   ∗ The unit is initialized.
   Use network initialization mode to initialize the network related settings.

NOTE :
- If the unit fails to enter the service mode in step 3, repeat the procedure from step 1.
- Initializing the device restores the customized settings to the factory settings. Write down your settings in advance and reconfigure the settings after initialization.

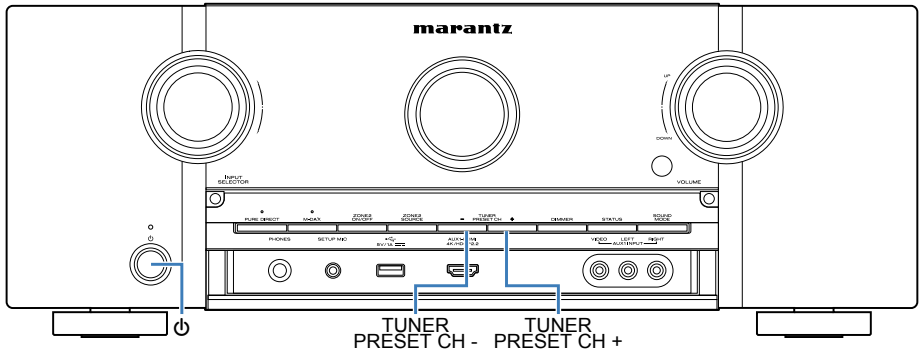

JIG FOR SERVICING

Use the following jigs (extension cable kit) when repairing the PCBs.
Order with your dealer for the jigs your dealer if necessary.

8U-110084S : EXTENSION UNIT KIT : 1 Set
8U-1101365 : EXTENSION UNIT KIT : 1 Set
△2 9006391038105 : JIG 29P EXTENSION CABLE : 1 Set
(See JIG FOR SERVICING)

ELECTRICAL

SCHEMATIC DIAGRAMS

SCH01 DIGITAL CONNECT
SCH02 DIGITAL POWER
SCH03 MAIN CPU
SCH04 EXPANDER
SCH05 PROTECTION
SCH06 DIR
SCH07 AUDIO PLD
SCH08 DSP1
SCH09 ADC
SCH10 ZONE,LEGO DAC
SCH11 LEGO
SCH12 VIDEO DECODER
SCH13 HDMI SW2
SCH14 HDMI SW1
SCH15 VSP & IP & OSD
SCH16 VIDEO PLD
SCH17 HDMI TX & EHANCED ARC
SCH18 INPUT
SCH19 PREOUT
SCH20 HDAM CNT & FHDMI
SCH21 A-VIDEO
SCH22 RC-5
SCH23 RS232C_TRIGGER
SCH24 SIDE CNT
SCH25 FRT CNT
SCH26 MAIN DAC1
SCH27 MAIN DAC2
SCH28 SPK
SCH29 REGULATOR
SCH30 5CH AMP
SCH31 4CH AMP
SCH32 FRONT
SCH33 HDAM1
SCH34 HDAM2
SCH35 SMPS

PRINTED CIRCUIT BOARDS

DIGITAL
INPUT, F-HDMI, CONNECT-2, CONNECT-3, CONNECT-4
VIDEO, SIDE CNT, FRONT CONT FFC
SPK, SPK H2L, GUIDE TRANS, GUIDE SIDE
5CH AMP, 4CH AMP
FRONT, HDMI FFC TOP
FRONT CNT, TUNER, BKT, HDAM, SMPS

LEVEL DIAGRAM

FRONT ch
CENTER / SURROUND ch
SUBWOOFER ch
ASSIGN1 / 2 (SURR.BACK / HEIGHT1 / HEIGHT2) ch
ZONE2 ch

BLOCK DIAGRAM

ANALOG AUDIO DIAGRAM
DIGITAL AUDIO DIAGRAM
VIDEO DIAGRAM
HDMI DIAGRAM

POWER DIAGRAM

WIRING DIAGRAM

SEMICONDUCTORS

1. IC's
2. FL DISPLAY
3. Remote Code Table

SCH01 DIGITAL CONNECT

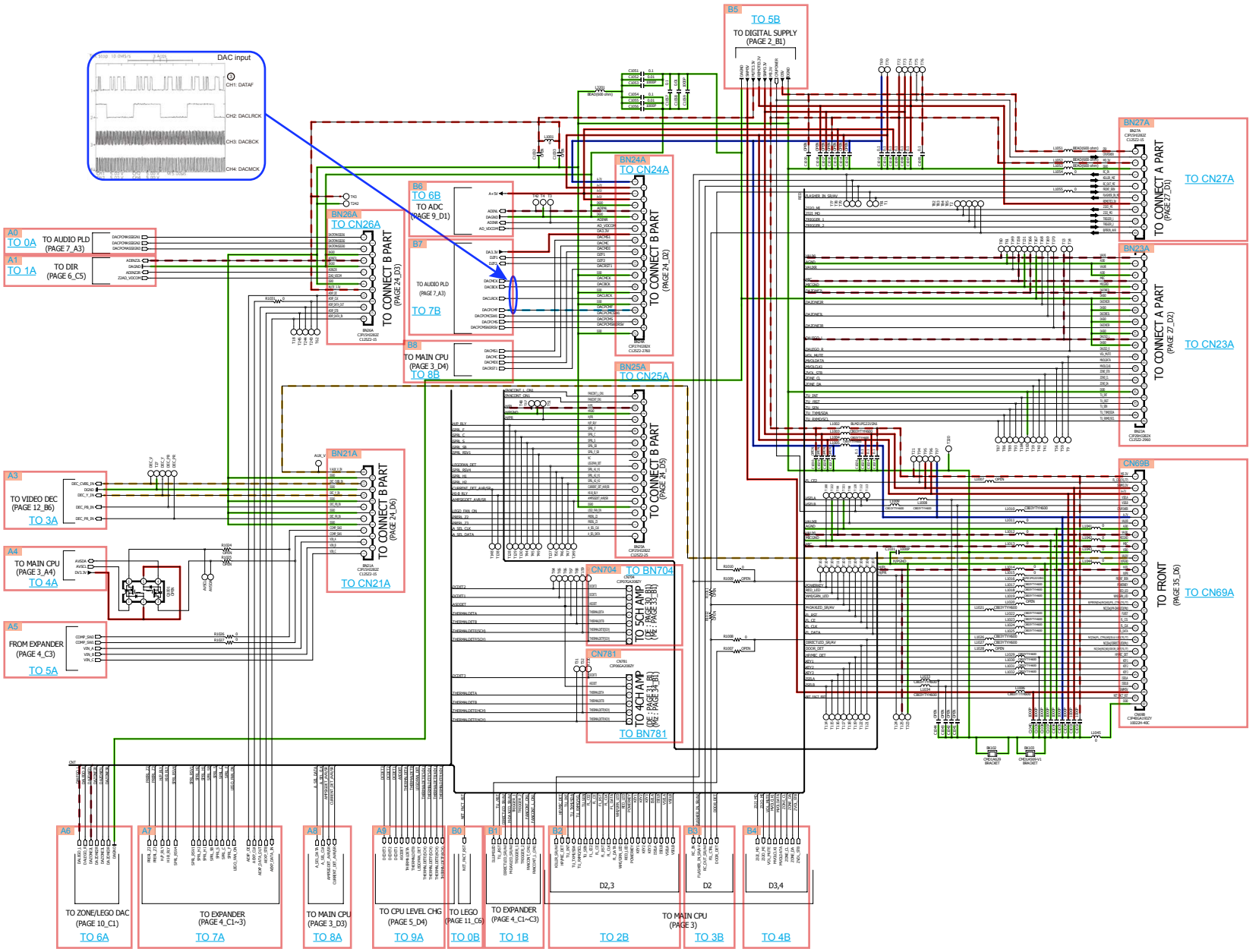

GND LINE | POWER+ LINE | POWER- LINE | ANALOG AUDIO | DIGITAL AUDIO | TMDS SIGNAL | ANALOG VIDEO | DIGITAL VIDEO | STBY POWER

SCH02 DIGITAL POWER

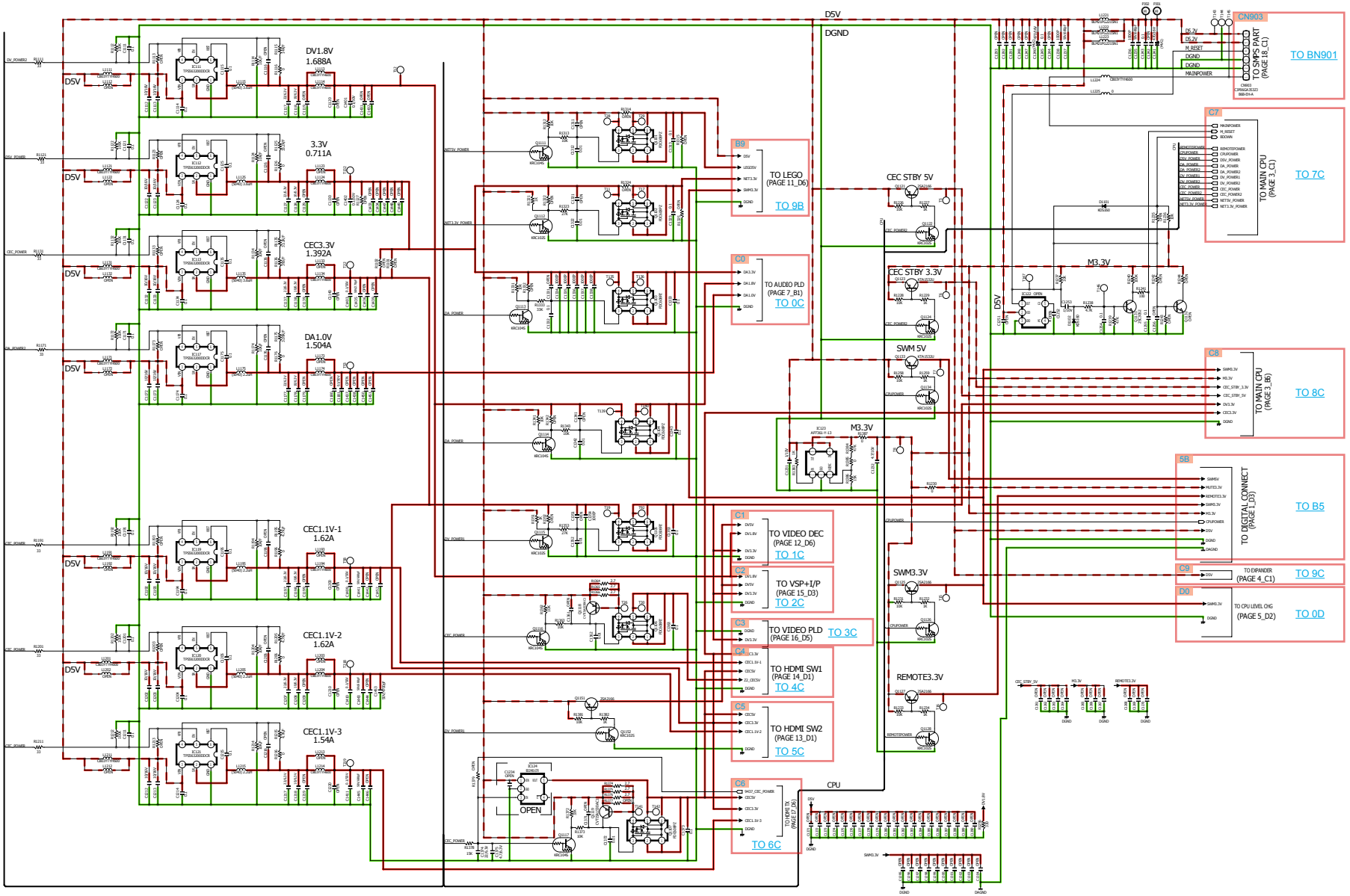

GND LINE | POWER+ LINE | POWER- LINE | ANALOG AUDIO | DIGITAL AUDIO | TMDS SIGNAL | ANALOG VIDEO | DIGITAL VIDEO | STBY POWER

SCH03 MAIN CPU

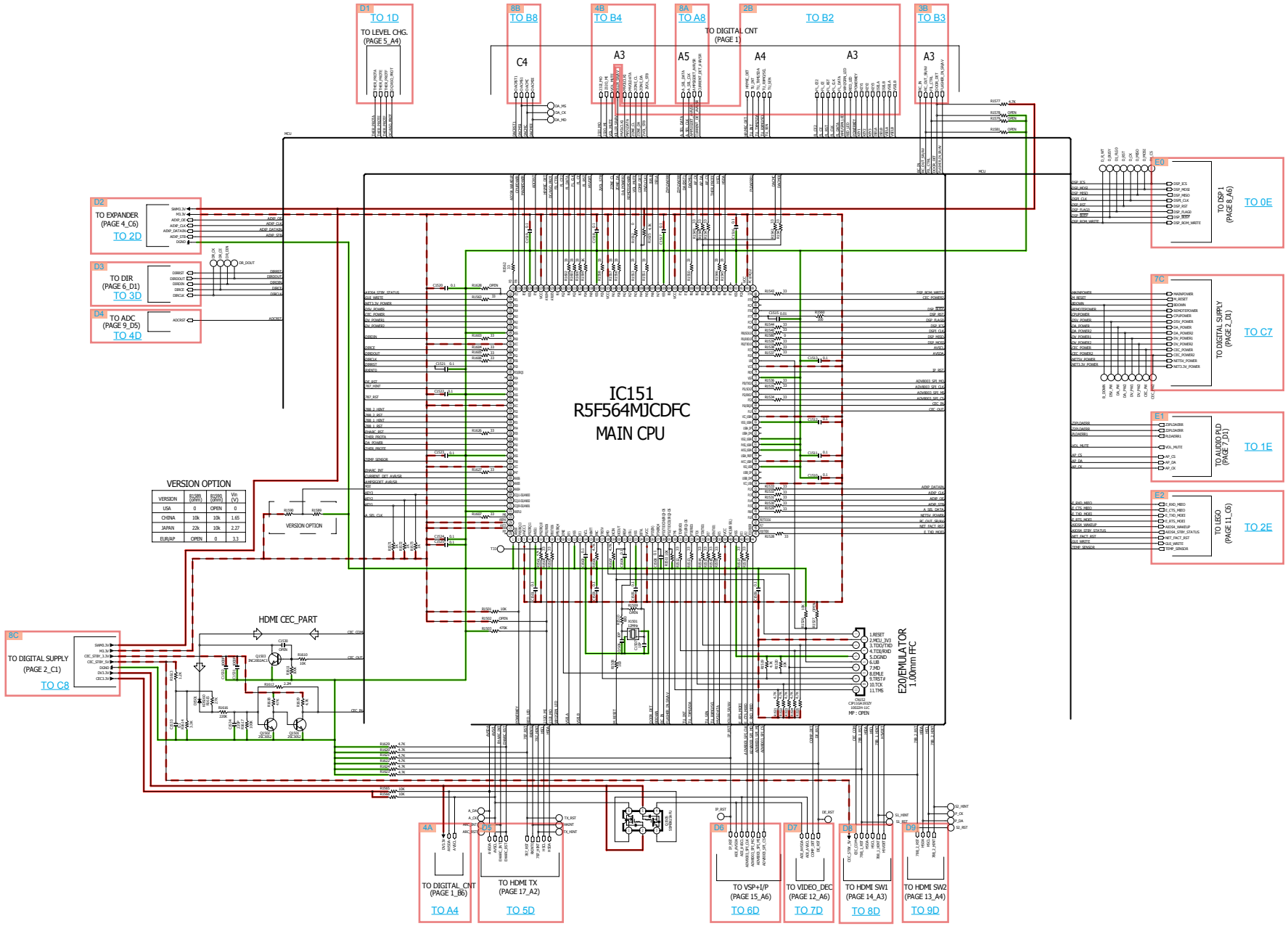

GND LINE | POWER+ LINE | POWER- LINE | ANALOG AUDIO | DIGITAL AUDIO | TMDS SIGNAL | ANALOG VIDEO | DIGITAL VIDEO | STBY POWER

SCH04 EXPANDER

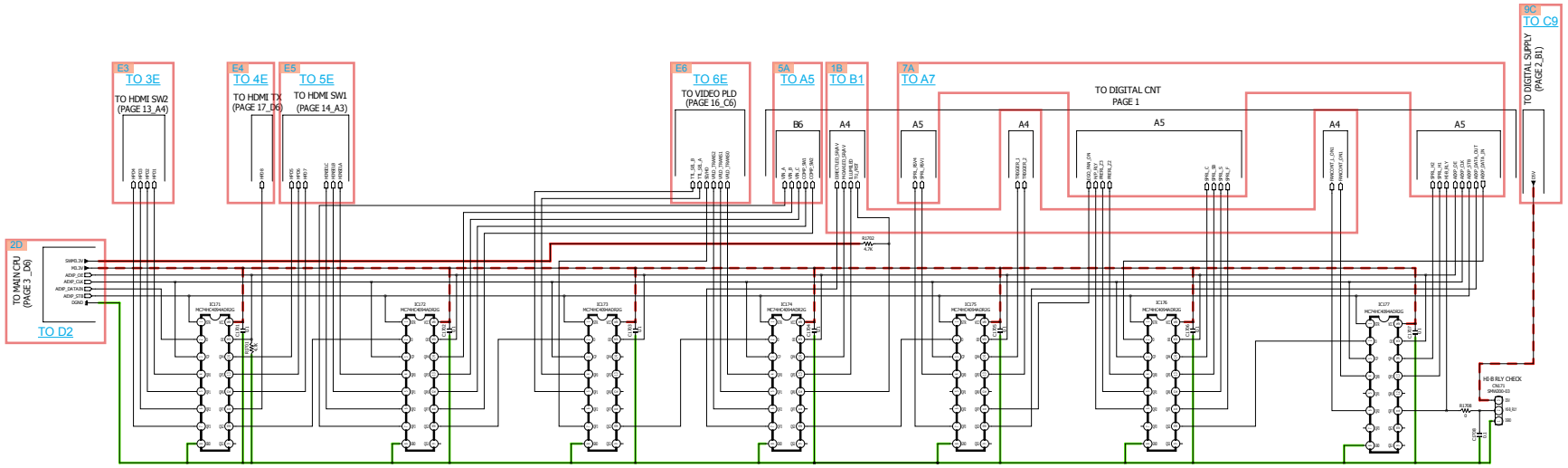

GND LINE | POWER+ LINE | POWER- LINE | ANALOG AUDIO | DIGITAL AUDIO | TMDS SIGNAL | ANALOG VIDEO | DIGITAL VIDEO | STBY POWER

SCH05 PROTECTION

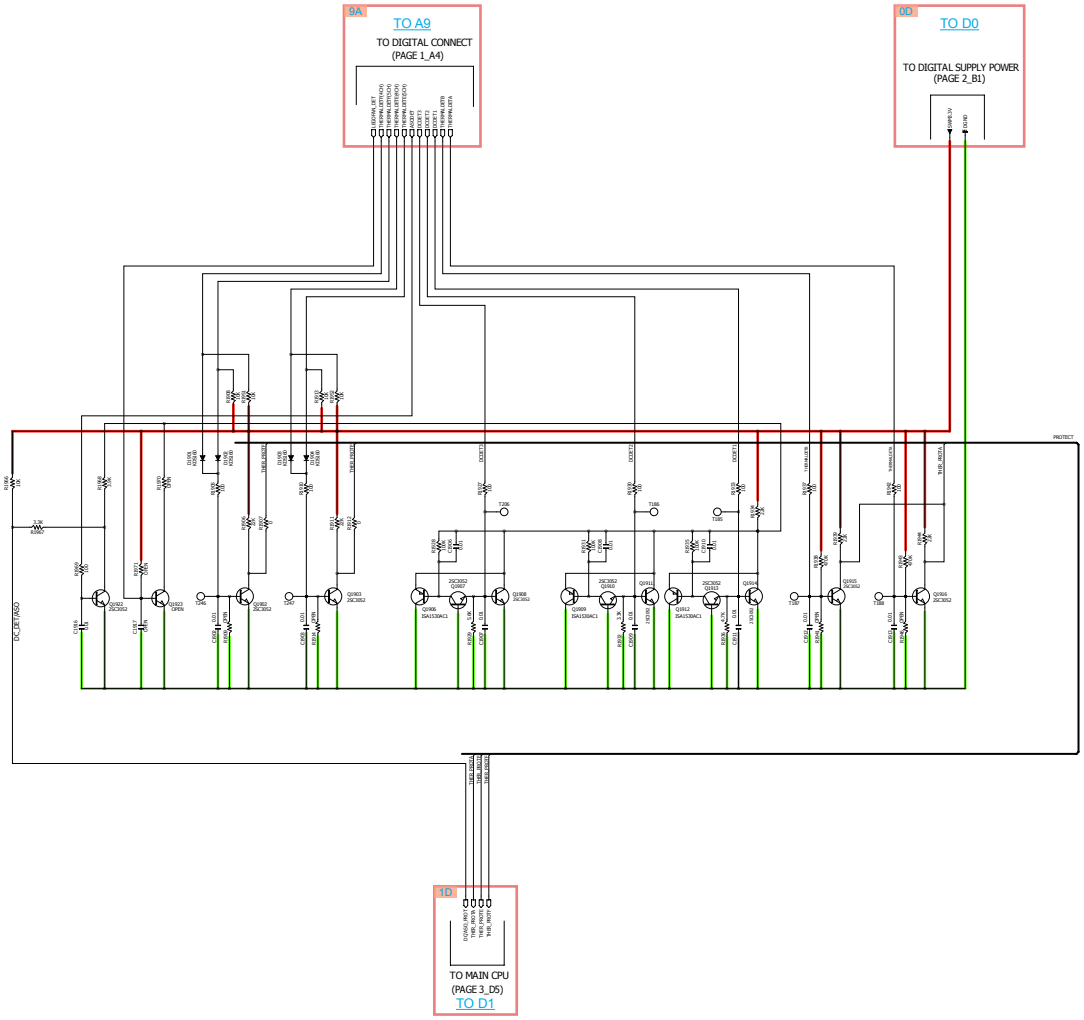

GND LINE | POWER+ LINE | POWER- LINE | ANALOG AUDIO | DIGITAL AUDIO | TMDS SIGNAL | ANALOG VIDEO | DIGITAL VIDEO | STBY POWER

SCH06 DIR

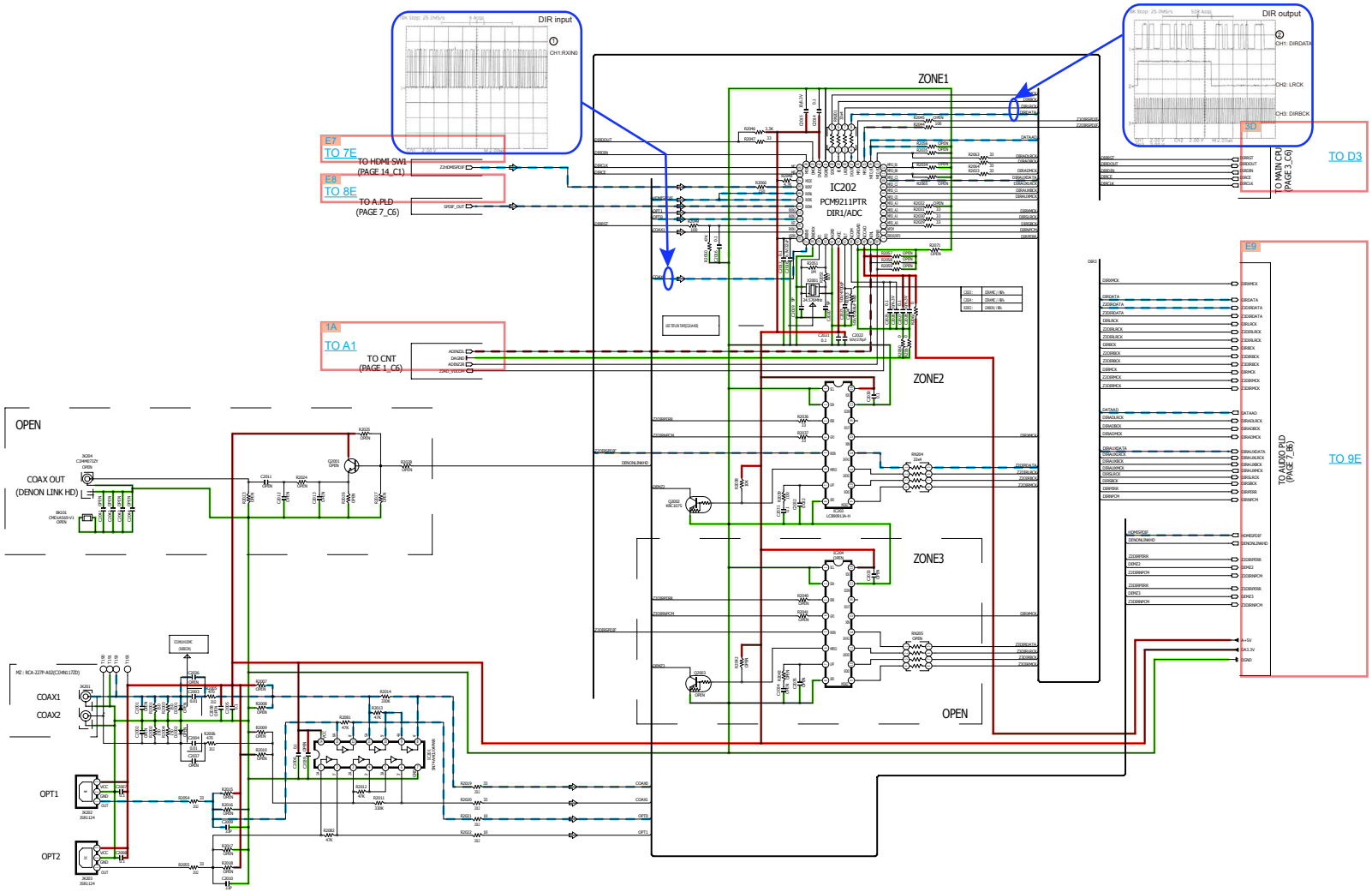

GND LINE | POWER+ LINE | POWER- LINE | ANALOG AUDIO | DIGITAL AUDIO | TMDS SIGNAL | ANALOG VIDEO | DIGITAL VIDEO | STBY POWER

SCH07 AUDIO PLD

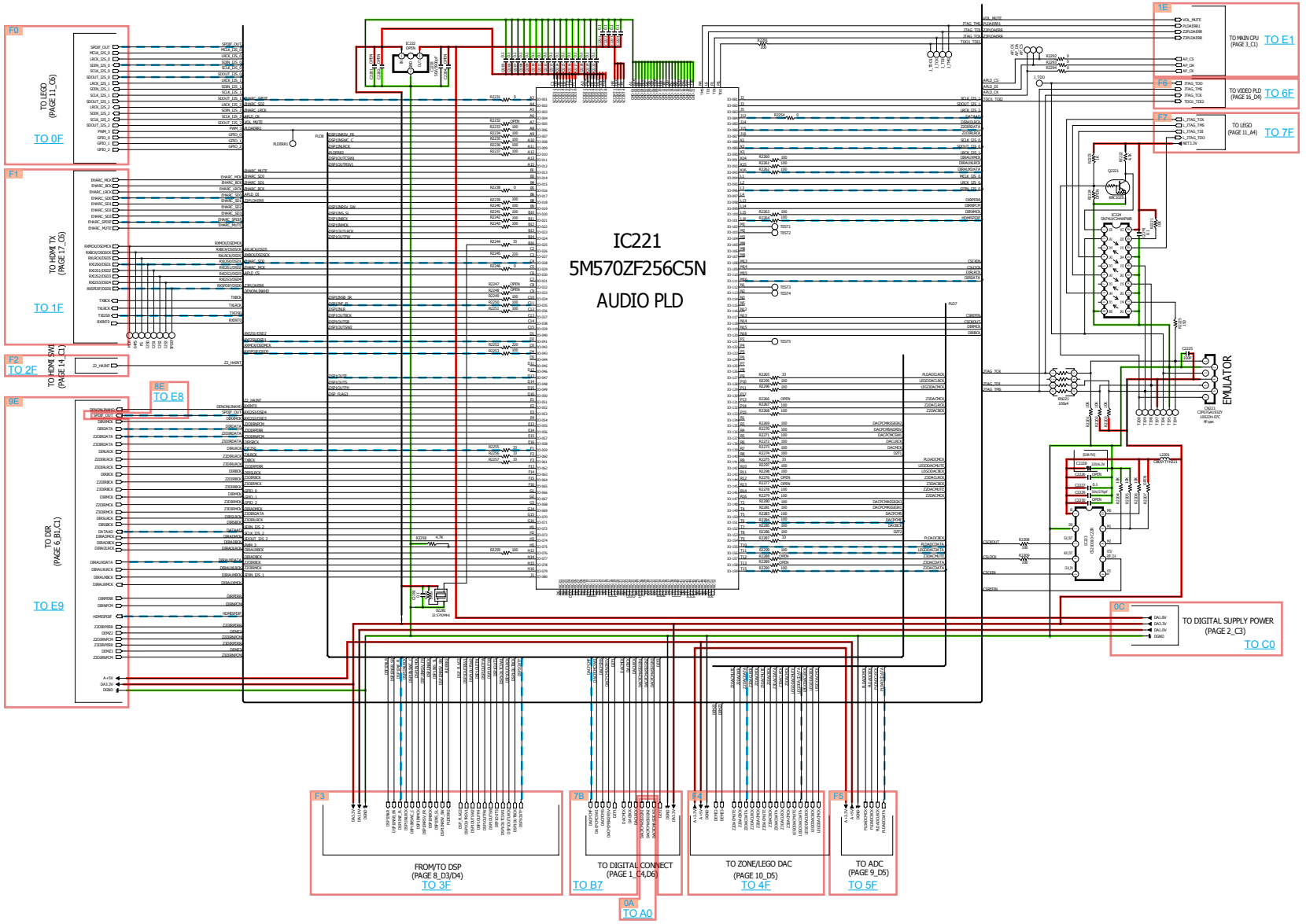

GND LINE | POWER+ LINE | POWER- LINE | ANALOG AUDIO | DIGITAL AUDIO | TMDS SIGNAL | ANALOG VIDEO | DIGITAL VIDEO | STBY POWER

SCH08 DSP1

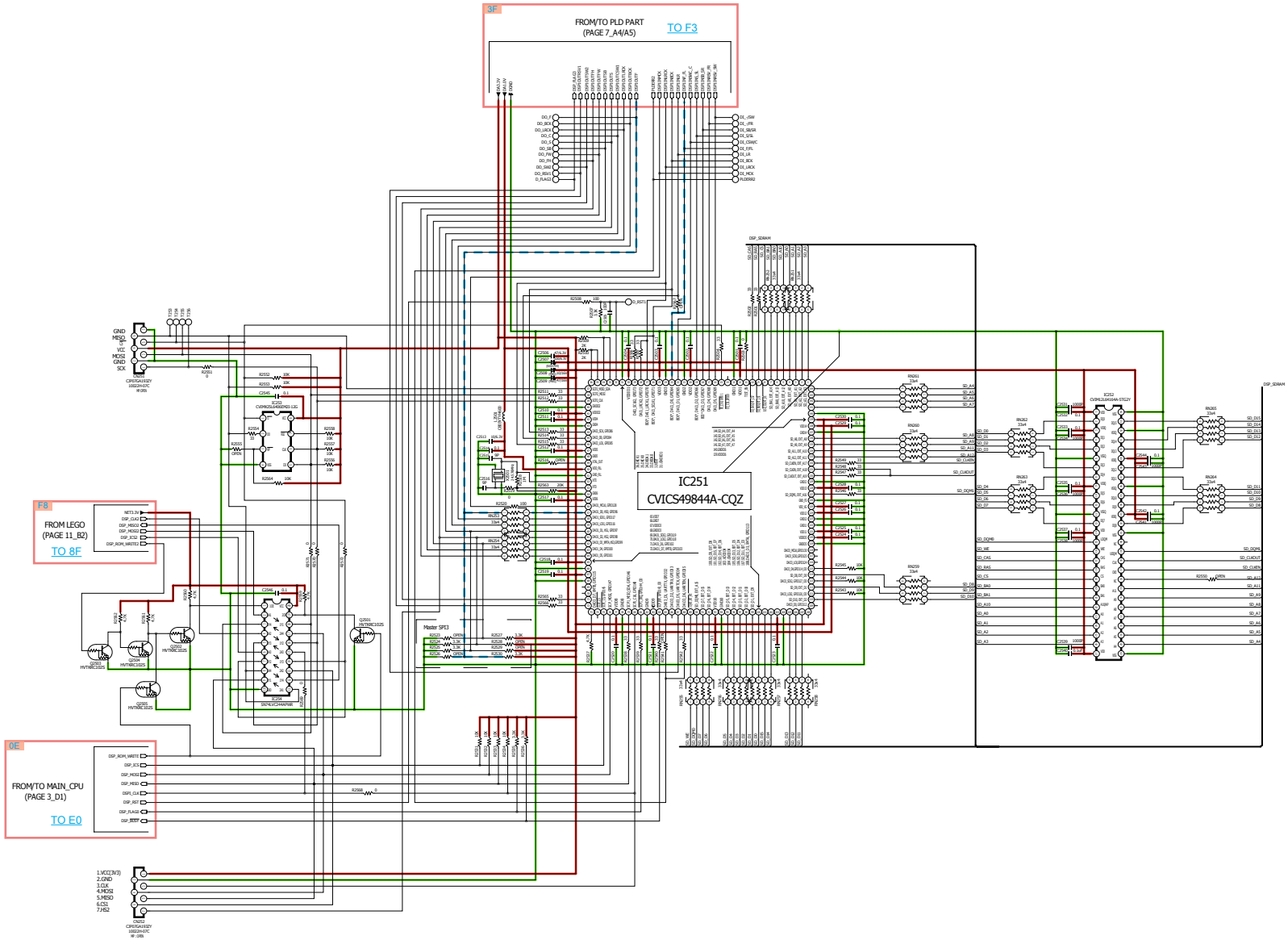

GND LINE | POWER+ LINE | POWER- LINE | ANALOG AUDIO | DIGITAL AUDIO | TMDS SIGNAL | ANALOG VIDEO | DIGITAL VIDEO | STBY POWER

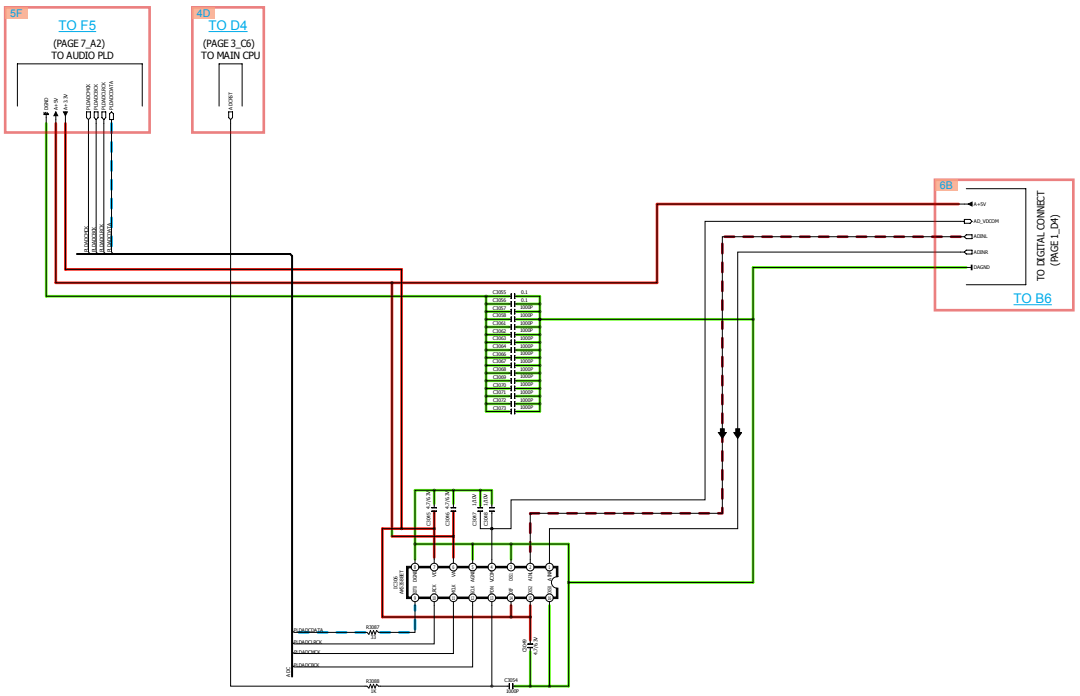

GND LINE | POWER+ LINE | POWER- LINE | ANALOG AUDIO | DIGITAL AUDIO | TMDS SIGNAL | ANALOG VIDEO | DIGITAL VIDEO | STBY POWER

SCH10 ZONE,LEGO DAC

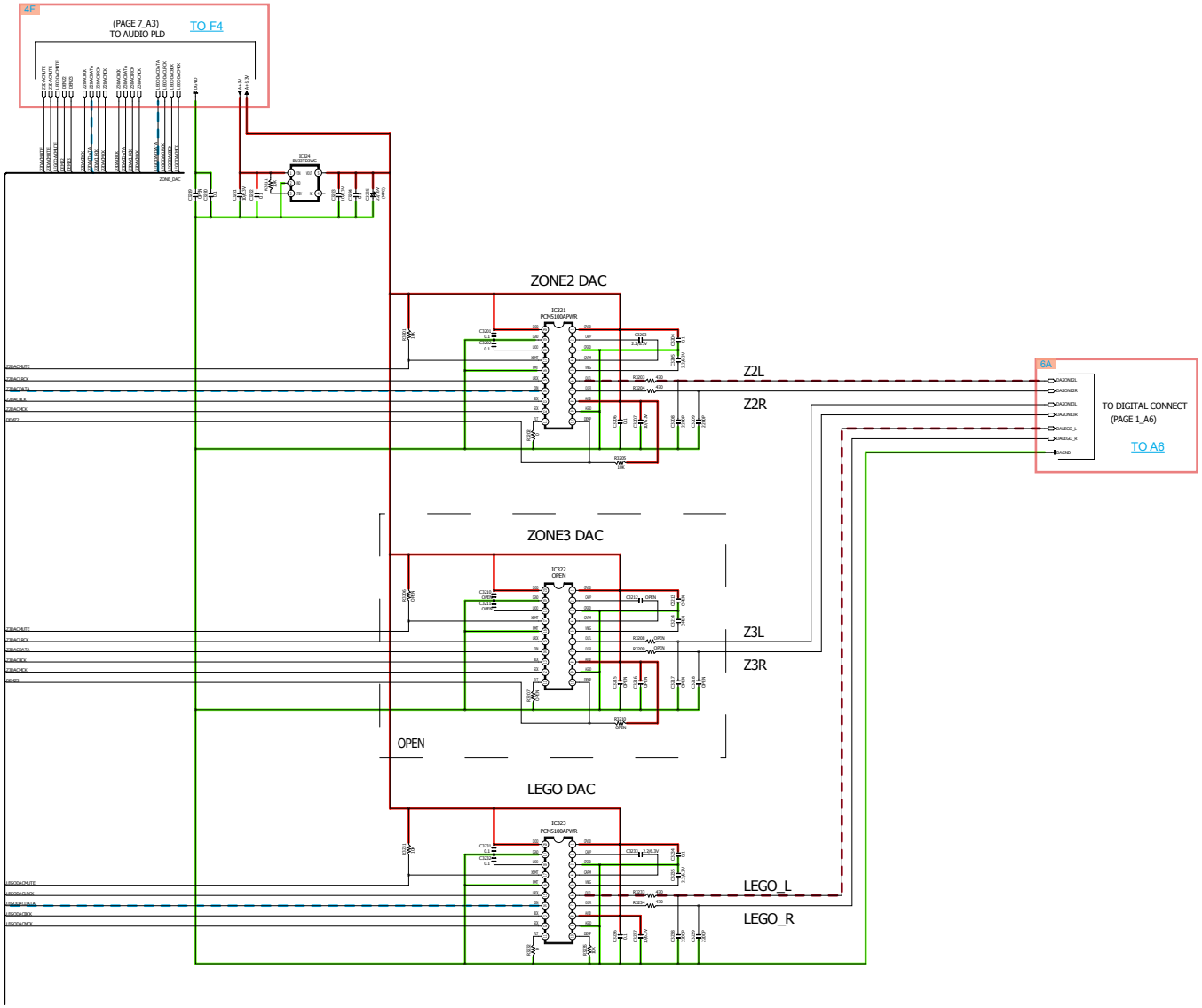

GND LINE POWER+ LINE POWER- LINE ANALOG AUDIO DIGITAL AUDIO TMDS SIGNAL ANALOG VIDEO DIGITAL VIDEO STBY POWER

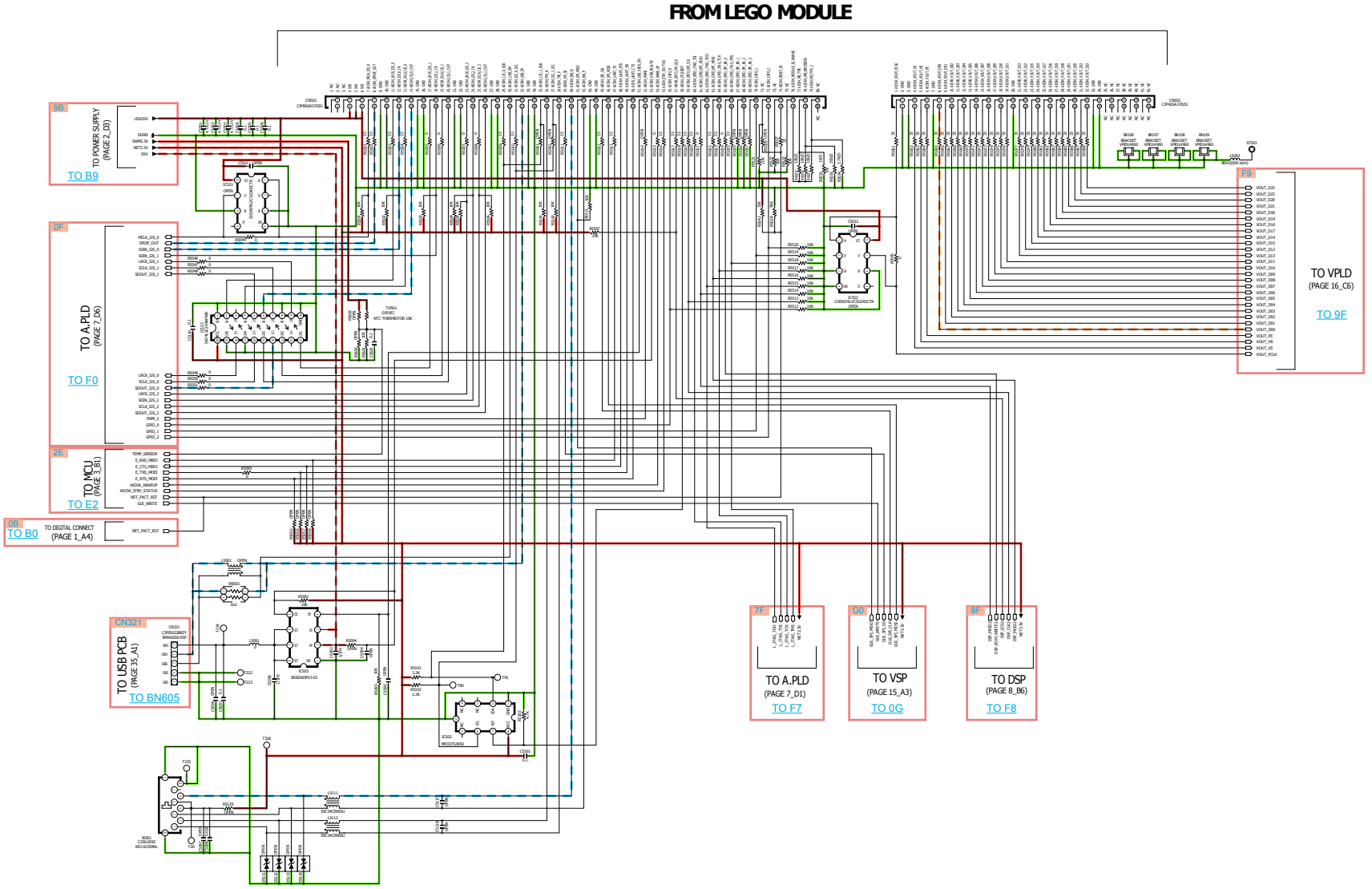

GND LINE | POWER+ LINE | POWER- LINE | ANALOG AUDIO | DIGITAL AUDIO | TMDS SIGNAL | ANALOG VIDEO | DIGITAL VIDEO | STBY POWER

SCH12 VIDEO DECODER

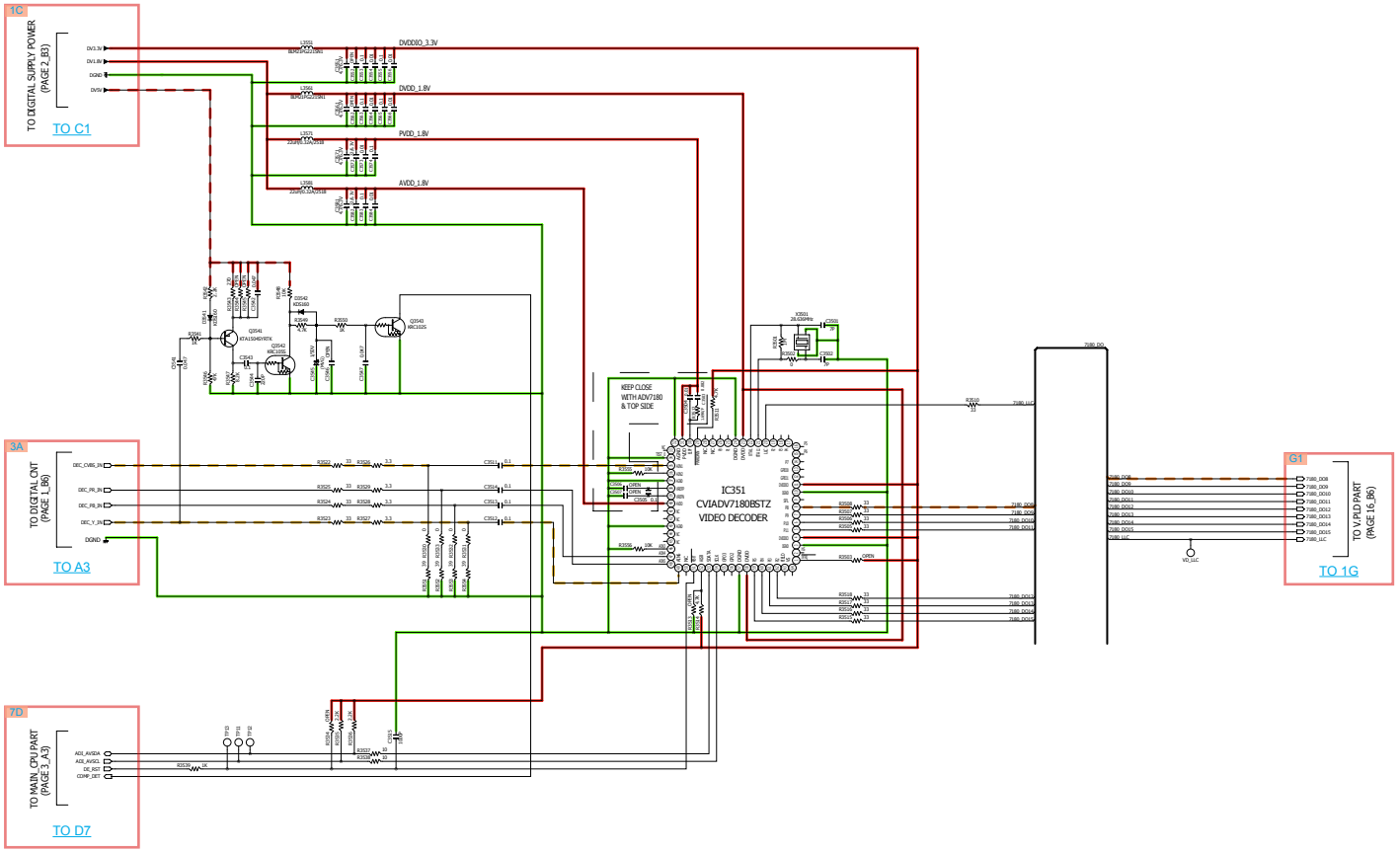

GND LINE | POWER+ LINE | POWER- LINE | ANALOG AUDIO | DIGITAL AUDIO | TMDS SIGNAL | ANALOG VIDEO | DIGITAL VIDEO | STBY POWER

SCH13 HDMI SW2

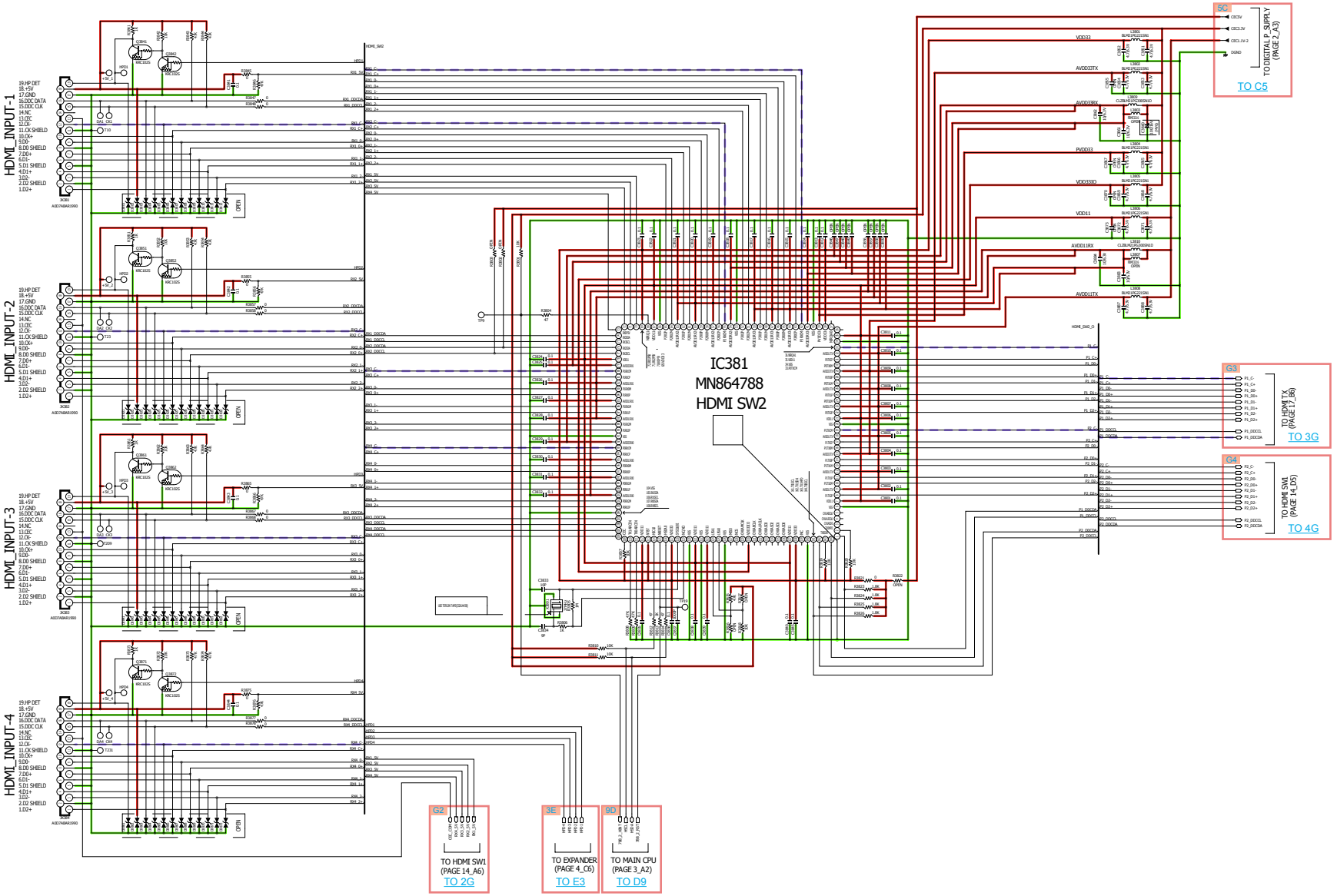

GND LINE | POWER+ LINE | POWER- LINE | ANALOG AUDIO | DIGITAL AUDIO | TMDS SIGNAL | ANALOG VIDEO | DIGITAL VIDEO | STBY POWER

SCH14 HDMI SW1

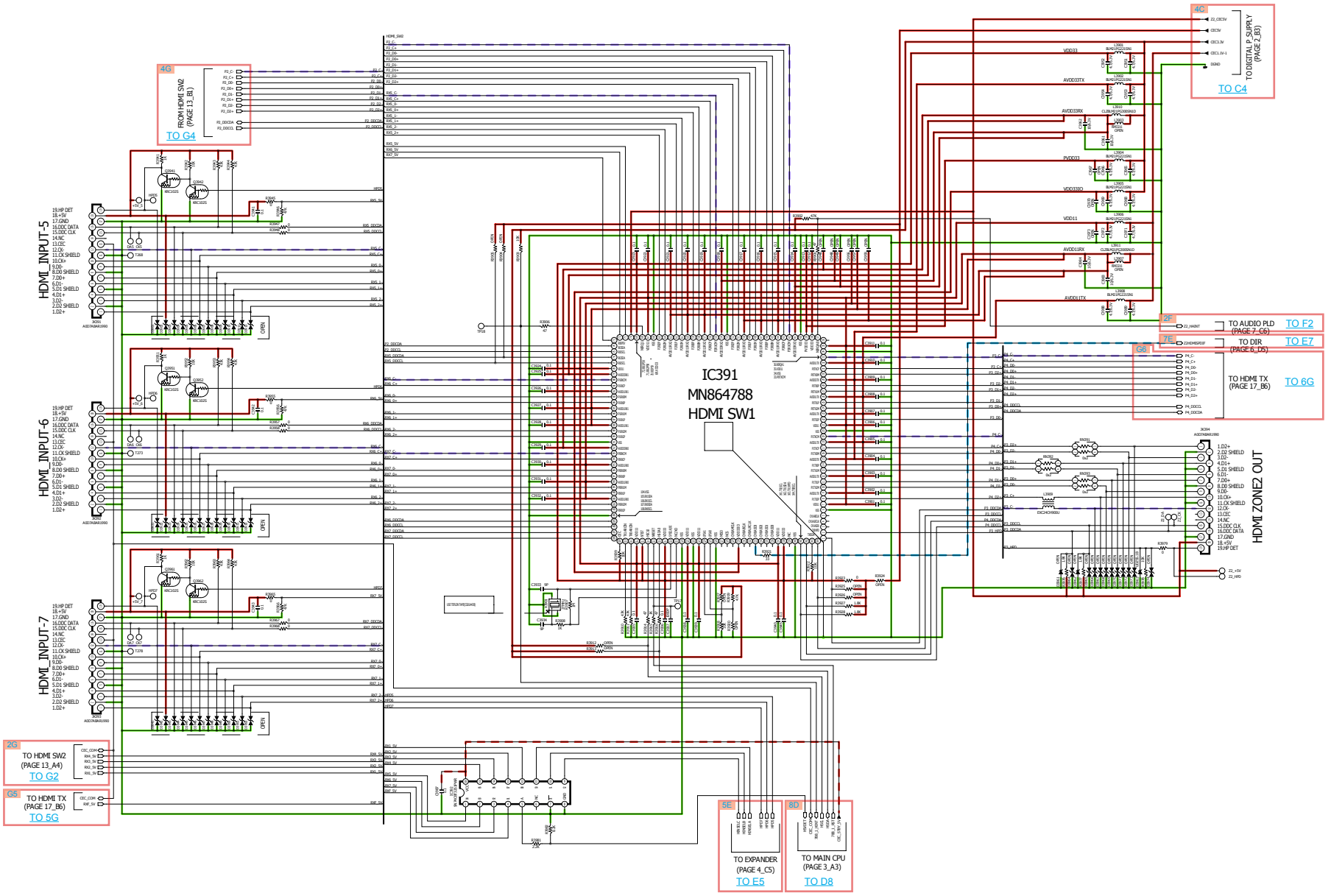

GND LINE | POWER+ LINE | POWER- LINE | ANALOG AUDIO | DIGITAL AUDIO | TMDS SIGNAL | ANALOG VIDEO | DIGITAL VIDEO | STBY POWER

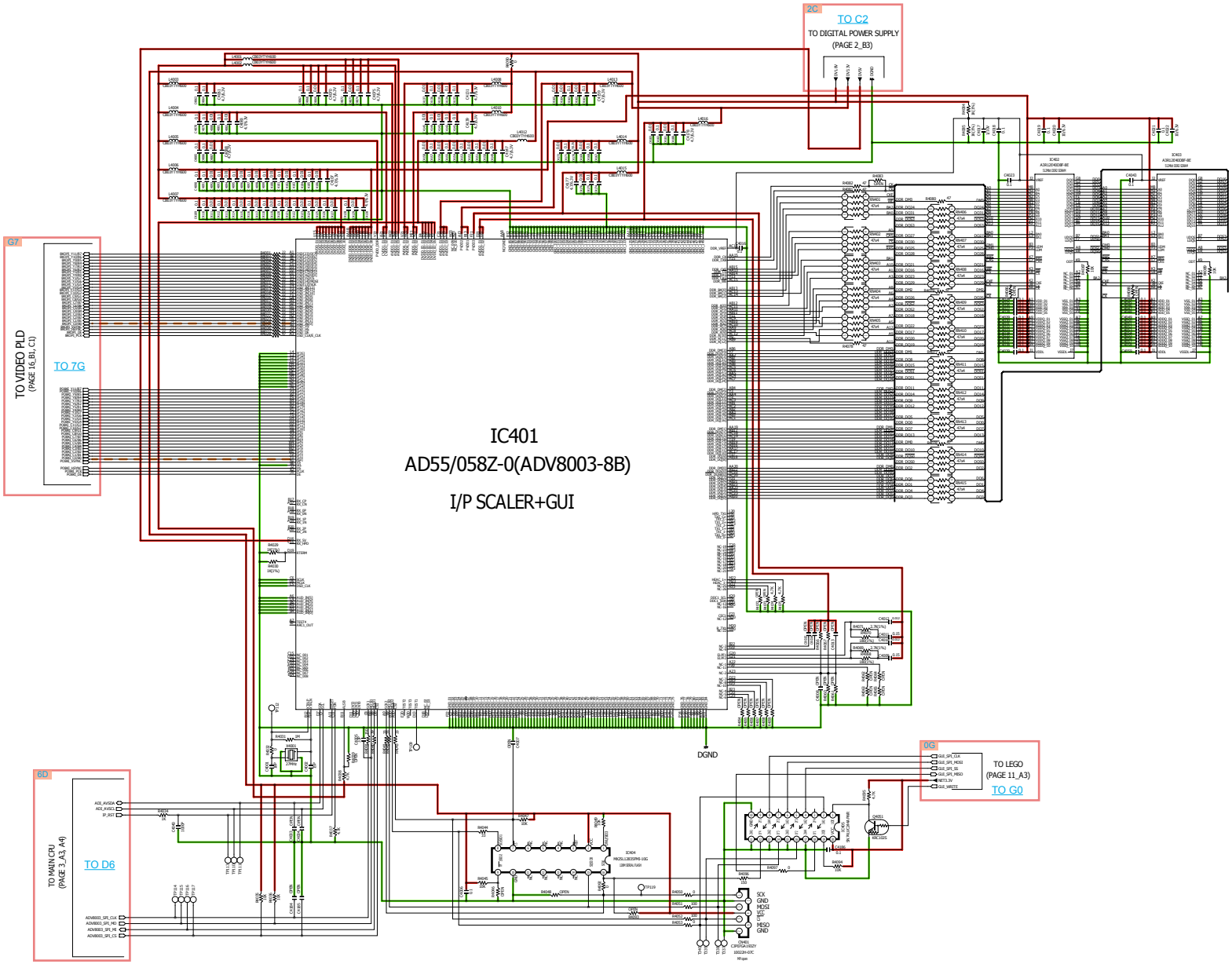

GND LINE | POWER+ LINE | POWER- LINE | ANALOG AUDIO | DIGITAL AUDIO | TMDS SIGNAL | ANALOG VIDEO | DIGITAL VIDEO | STBY POWER

SCH16 VIDEO PLD

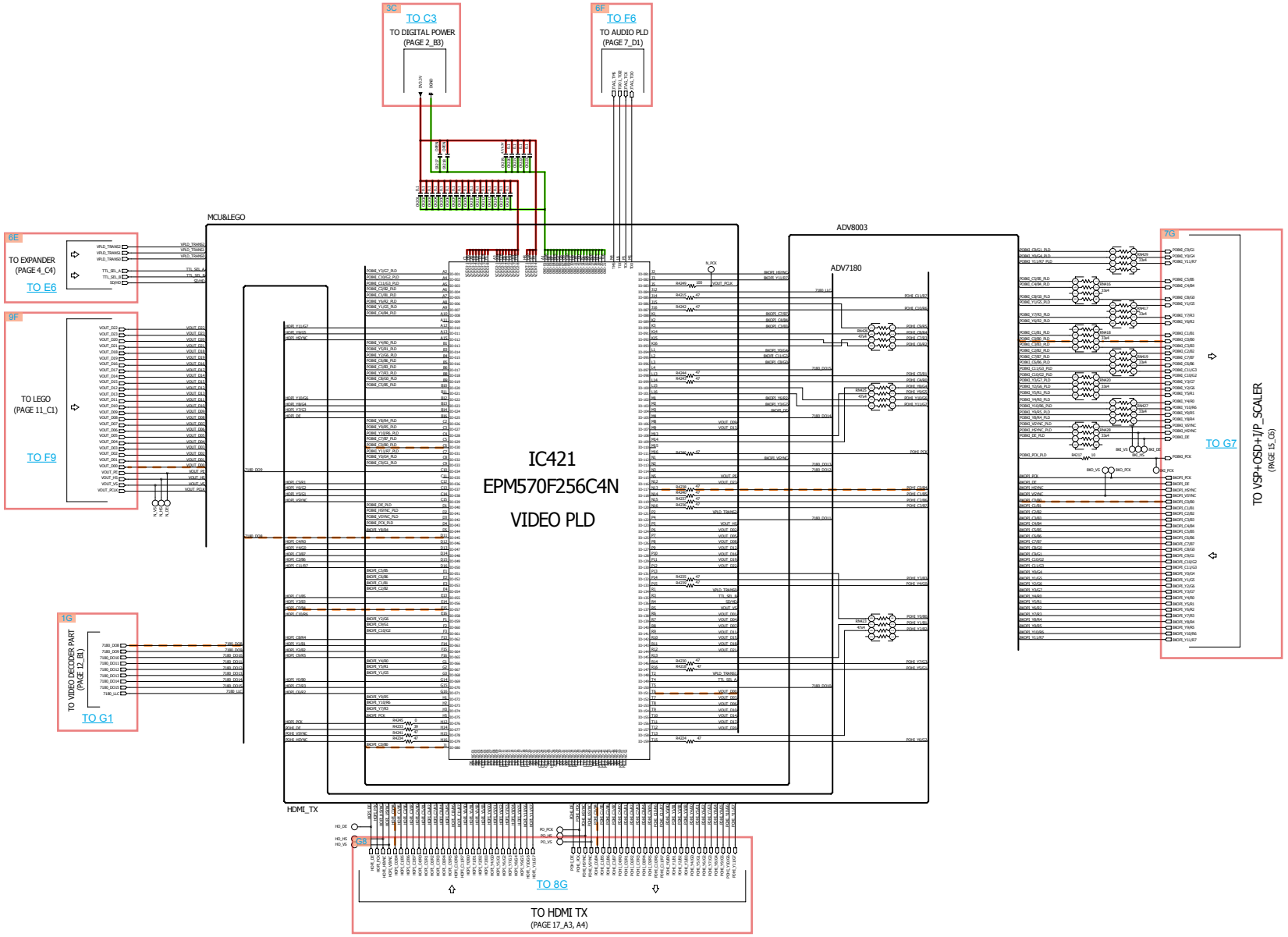

GND LINE | POWER+ LINE | POWER- LINE | ANALOG AUDIO | DIGITAL AUDIO | TMDS SIGNAL | ANALOG VIDEO | DIGITAL VIDEO | STBY POWER

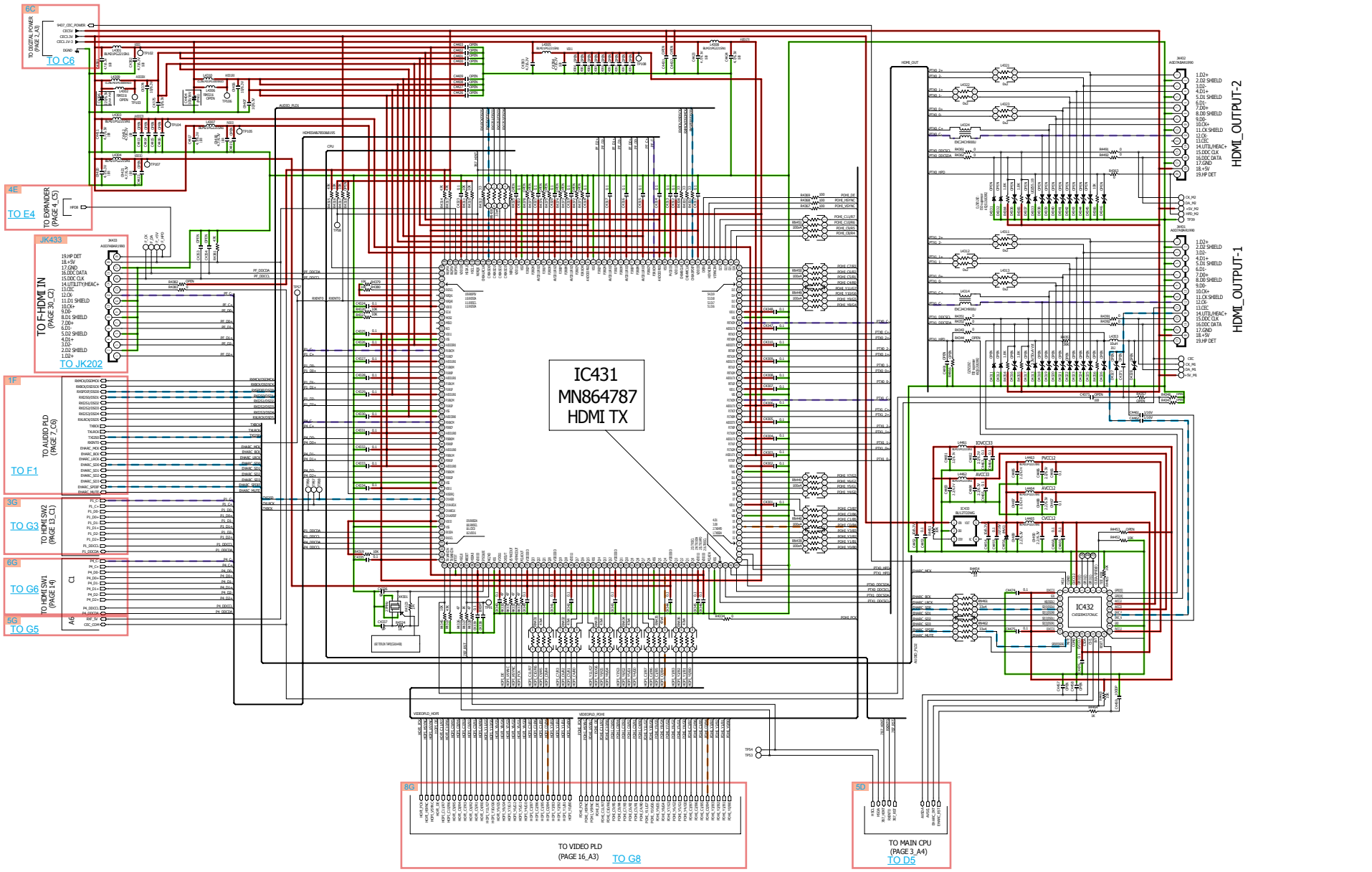

GND LINE | POWER+ LINE | POWER- LINE | ANALOG AUDIO | DIGITAL AUDIO | TMDS SIGNAL | ANALOG VIDEO | DIGITAL VIDEO | STBY POWER

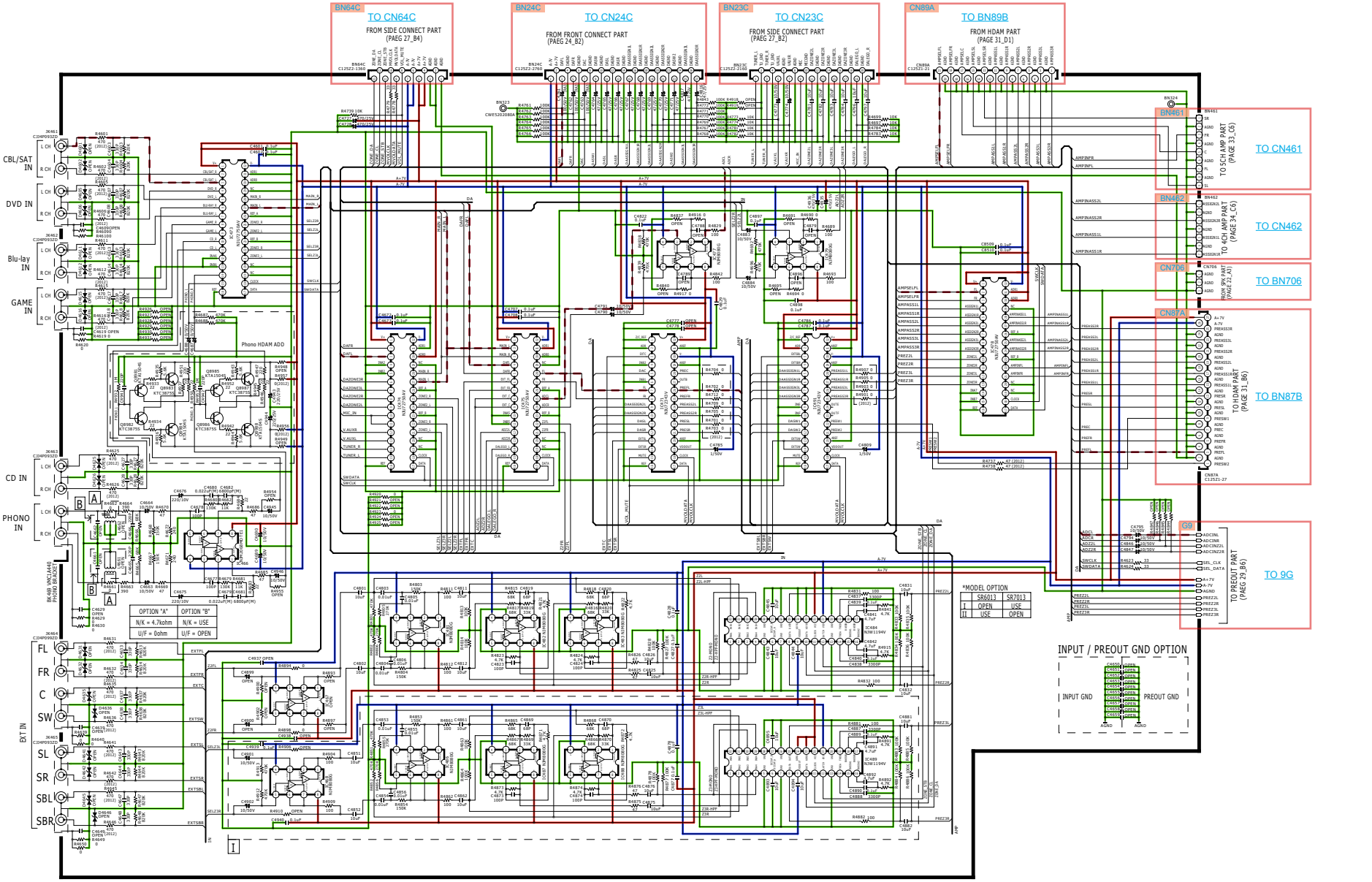

GND LINE | POWER+ LINE | POWER- LINE | ANALOG AUDIO | DIGITAL AUDIO | TMDS SIGNAL | ANALOG VIDEO | DIGITAL VIDEO | STBY POWER

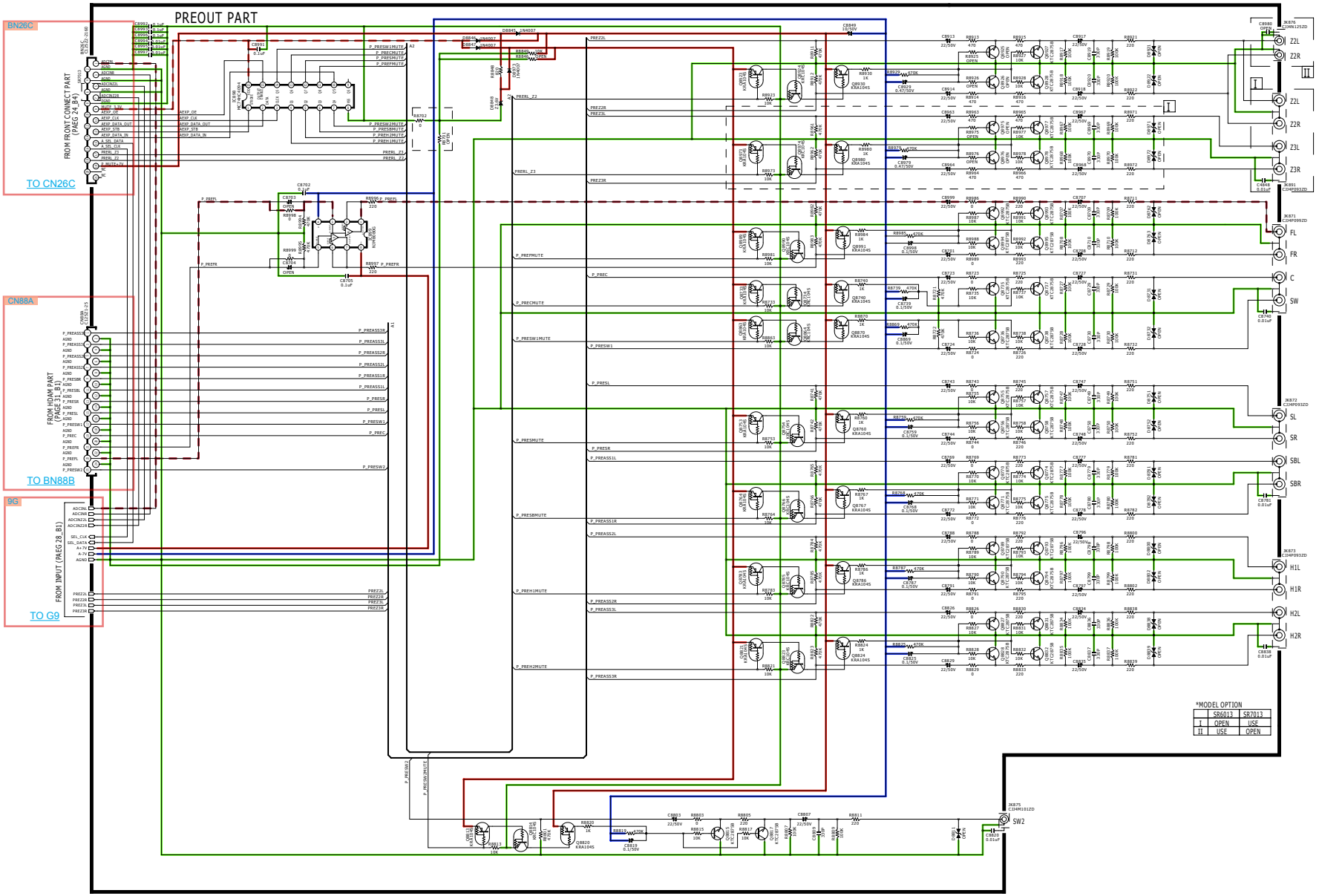

GND LINE | POWER+ LINE | POWER- LINE | ANALOG AUDIO | DIGITAL AUDIO | TMDS SIGNAL | ANALOG VIDEO | DIGITAL VIDEO | STBY POWER

FRONT HDMI (TCA9517DGKR)

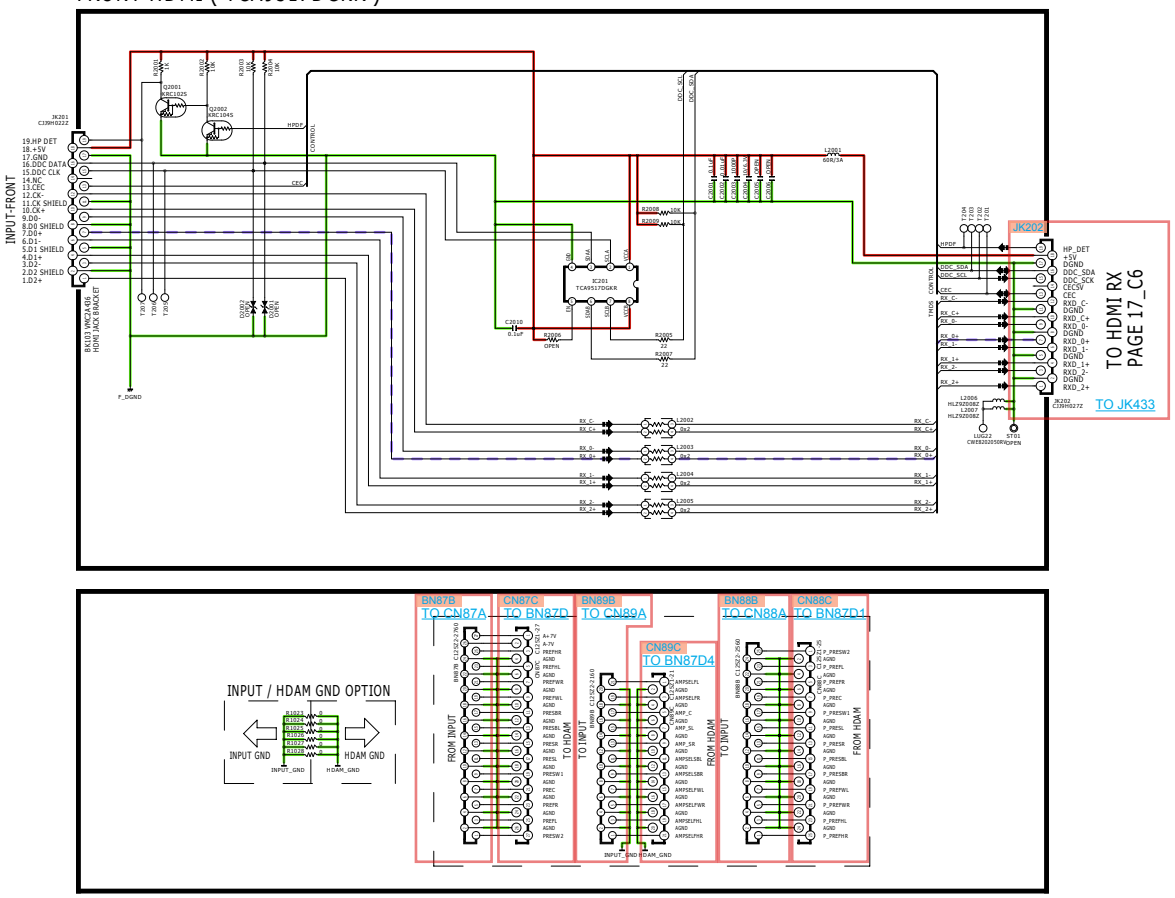

GND LINE | POWER+ LINE | POWER- LINE | ANALOG AUDIO | DIGITAL AUDIO | TMDS SIGNAL | ANALOG VIDEO | DIGITAL VIDEO | STBY POWER

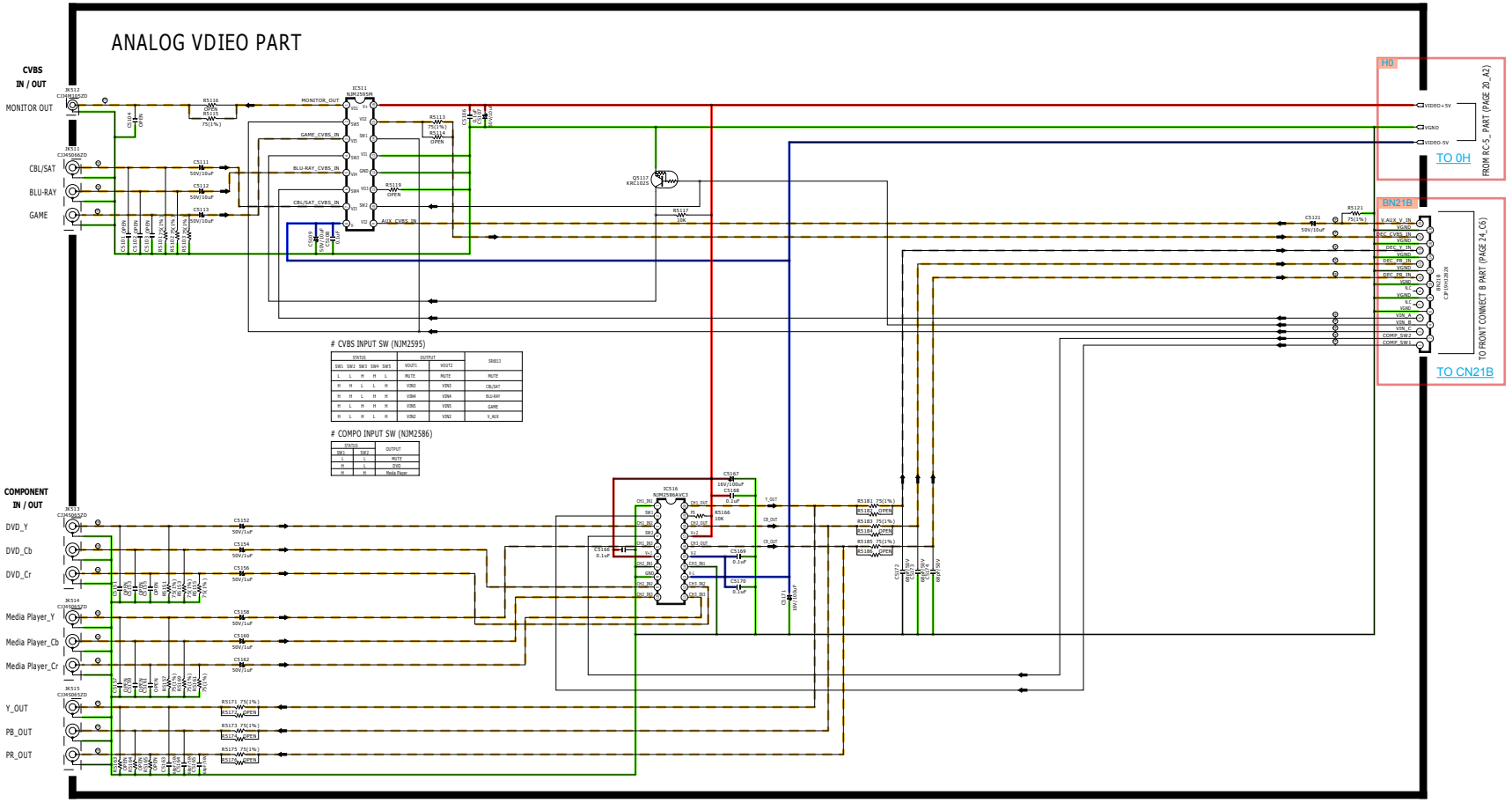

GND LINE POWER+ LINE POWER- LINE ANALOG AUDIO DIGITAL AUDIO TMDS SIGNAL ANALOG VIDEO DIGITAL VIDEO STBY POWER

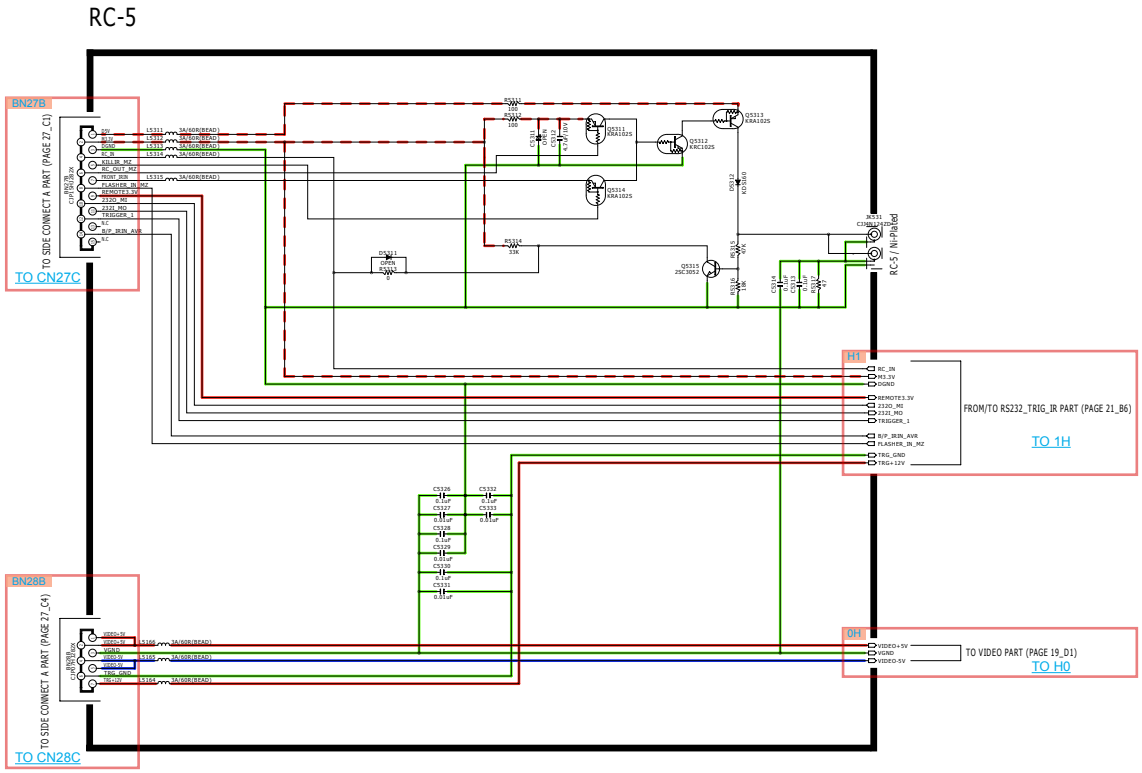

GND LINE POWER+ LINE POWER- LINE ANALOG AUDIO DIGITAL AUDIO TMDS SIGNAL ANALOG VIDEO DIGITAL VIDEO STBY POWER

SCH23 RS232C_TRIGGER

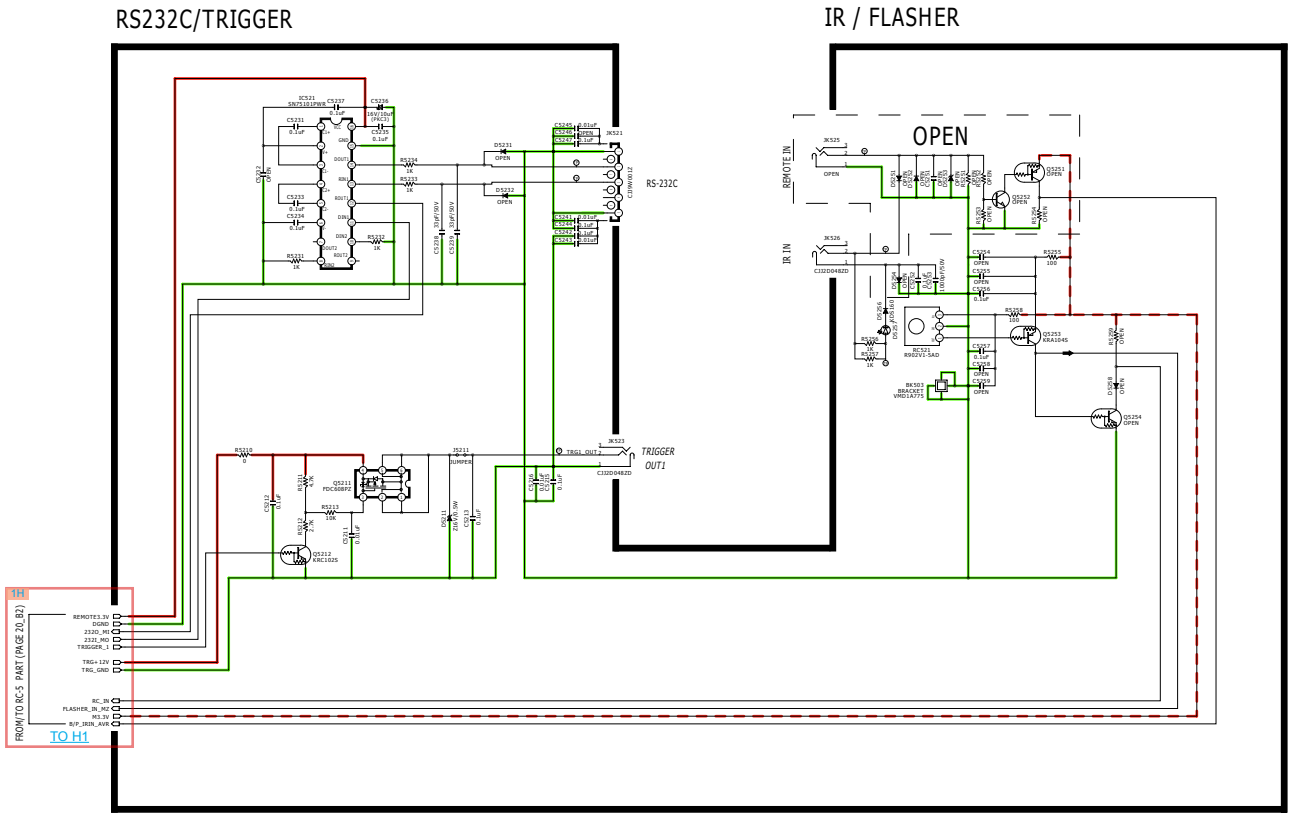

GND LINE | POWER+ LINE | POWER- LINE | ANALOG AUDIO | DIGITAL AUDIO | TMDS SIGNAL | ANALOG VIDEO | DIGITAL VIDEO | STBY POWER

SIDE CNT_CUP12921Z(CONNECT A)

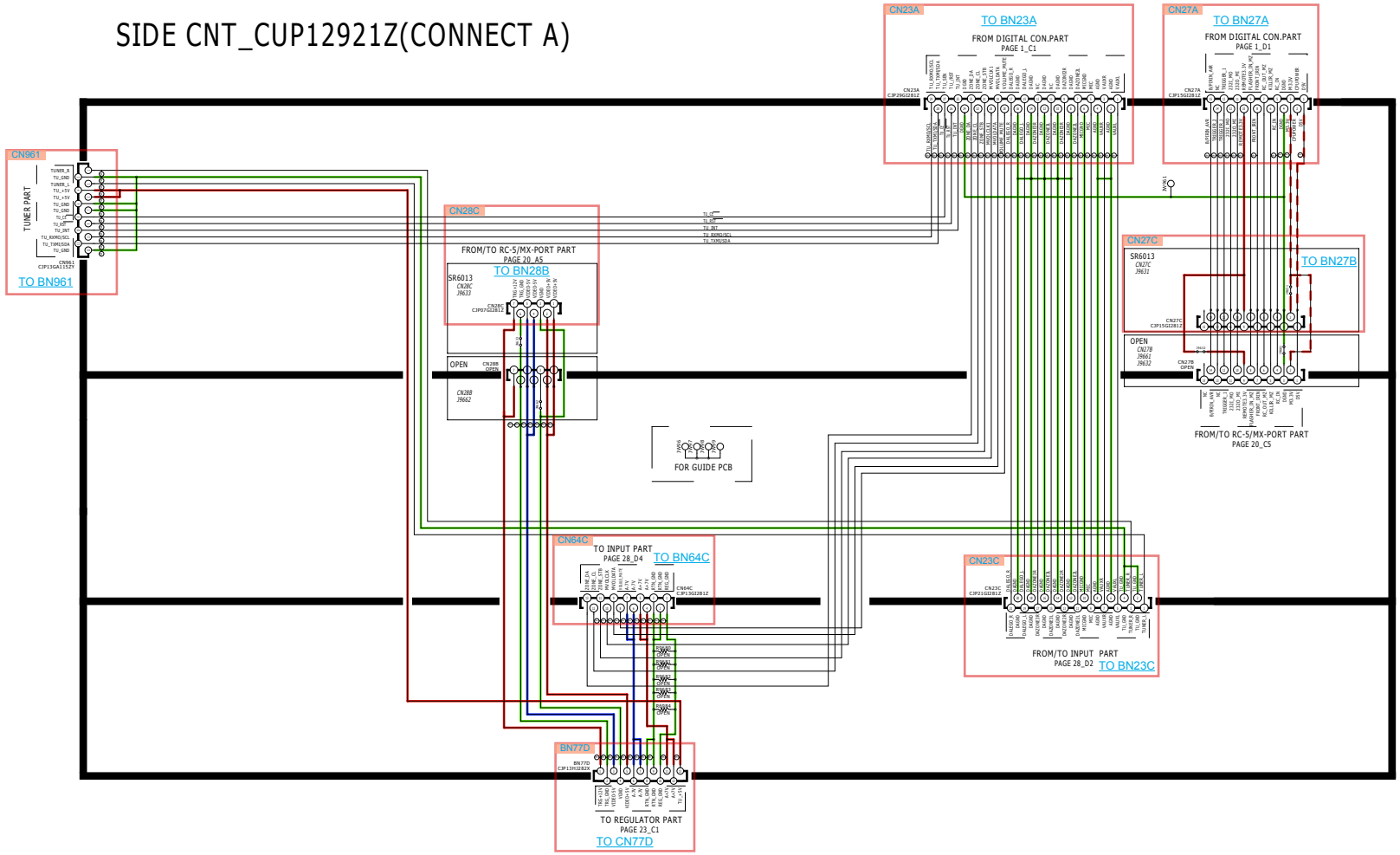

GND LINE POWER+ LINE POWER- LINE ANALOG AUDIO DIGITAL AUDIO TMDS SIGNAL ANALOG VIDEO DIGITAL VIDEO STBY POWER

SCH25 FRT CNT

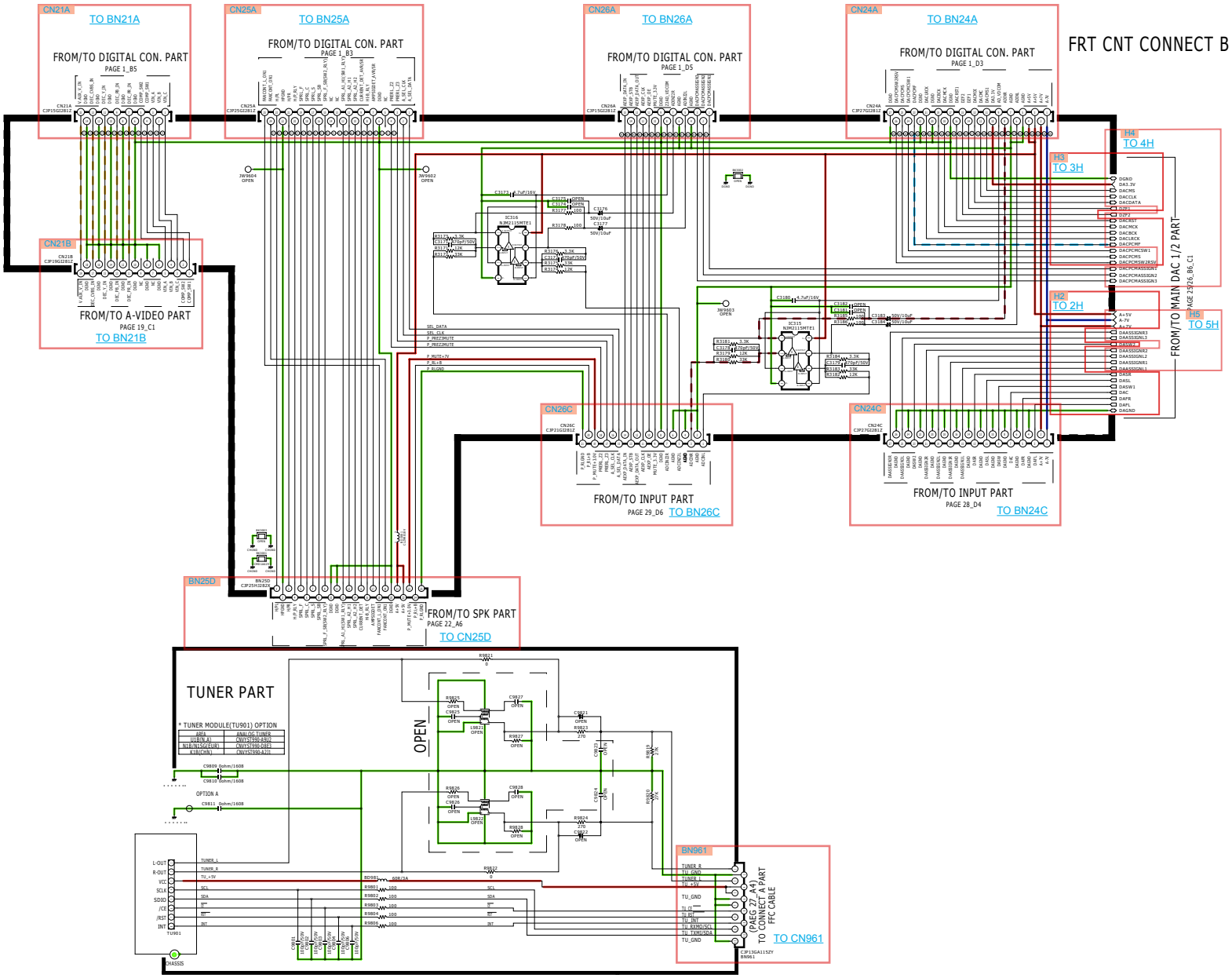

GND LINE | POWER+ LINE | POWER- LINE | ANALOG AUDIO | DIGITAL AUDIO | TMDS SIGNAL | ANALOG VIDEO | DIGITAL VIDEO | STBY POWER

SCH26 MAIN DAC1

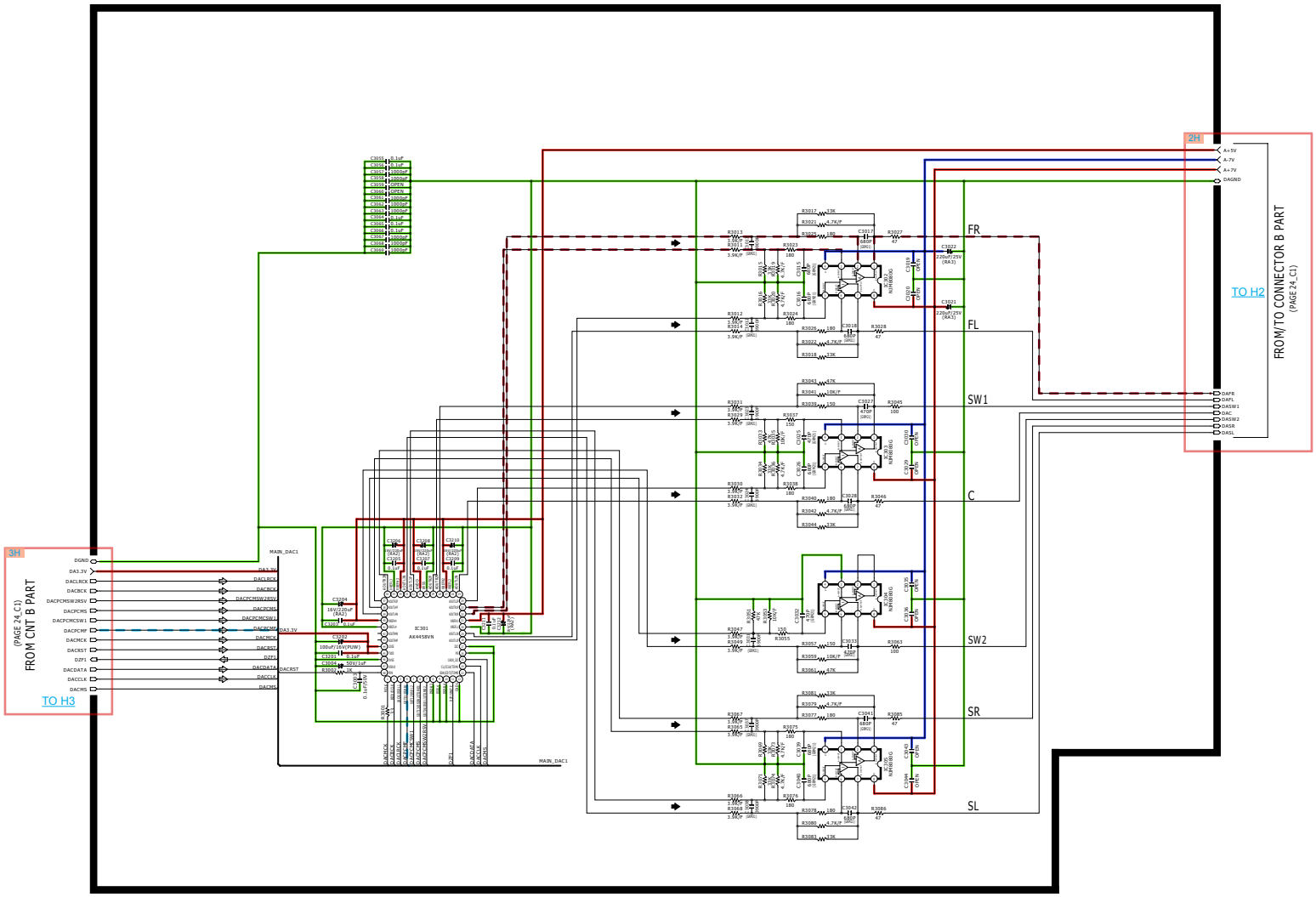

GND LINE POWER+ LINE POWER- LINE ANALOG AUDIO DIGITAL AUDIO TMDS SIGNAL ANALOG VIDEO DIGITAL VIDEO STBY POWER

SCH27 MAIN DAC2

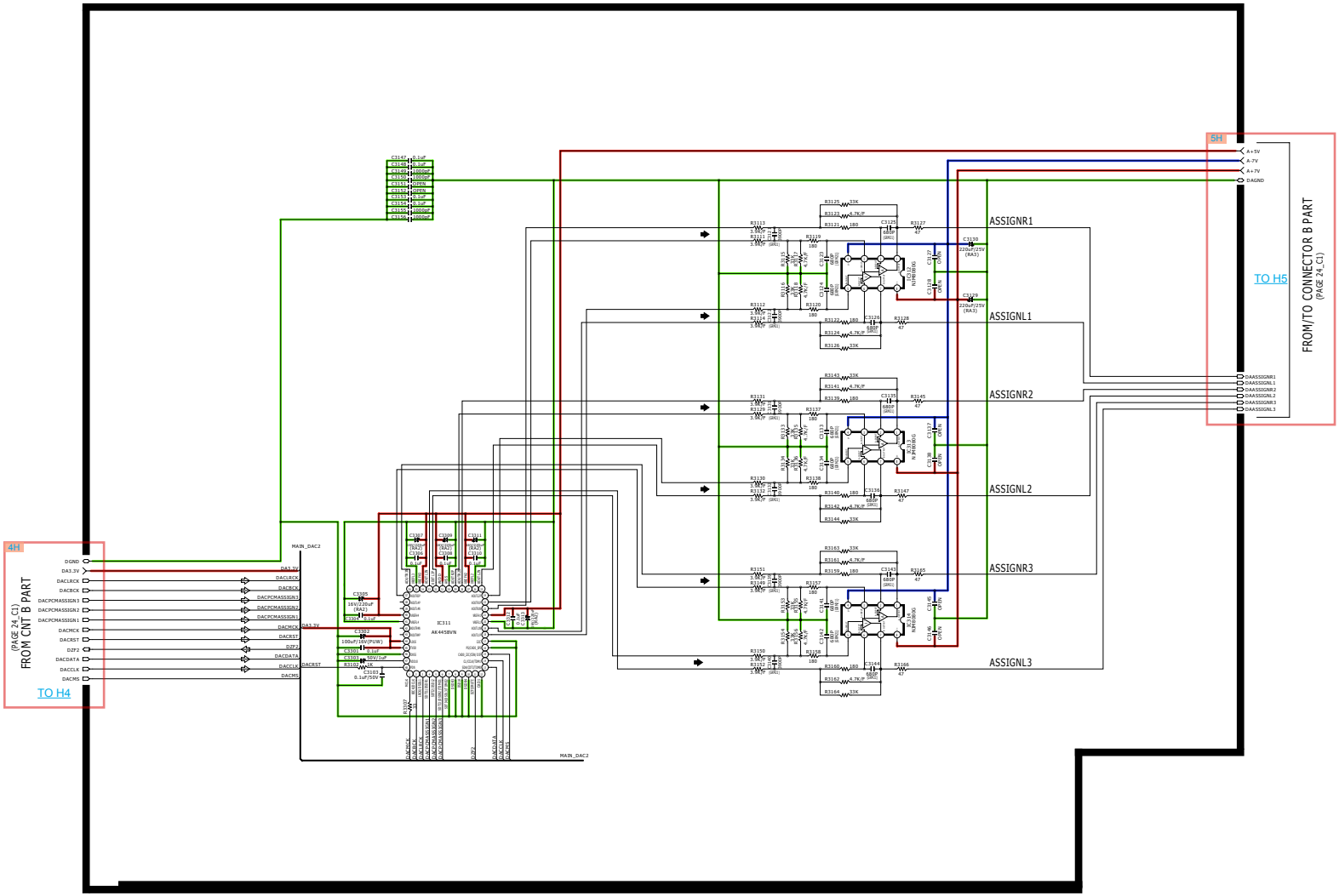

GND LINE | POWER+ LINE | POWER- LINE | ANALOG AUDIO | DIGITAL AUDIO | TMDS SIGNAL | ANALOG VIDEO | DIGITAL VIDEO | STBY POWER

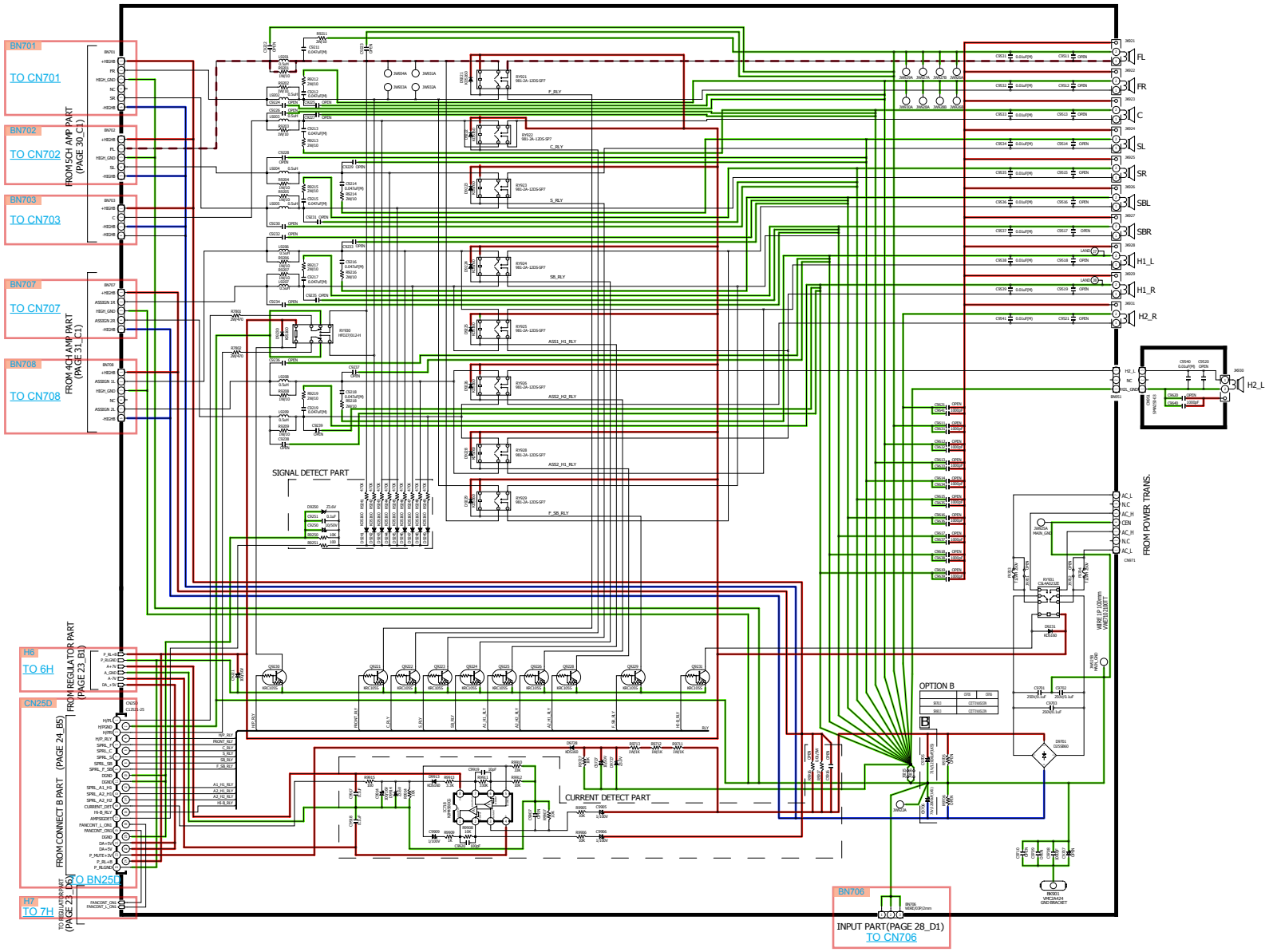

GND LINE | POWER+ LINE | POWER- LINE | ANALOG AUDIO | DIGITAL AUDIO | TMDS SIGNAL | ANALOG VIDEO | DIGITAL VIDEO | STBY POWER

SCH29 REGULATOR

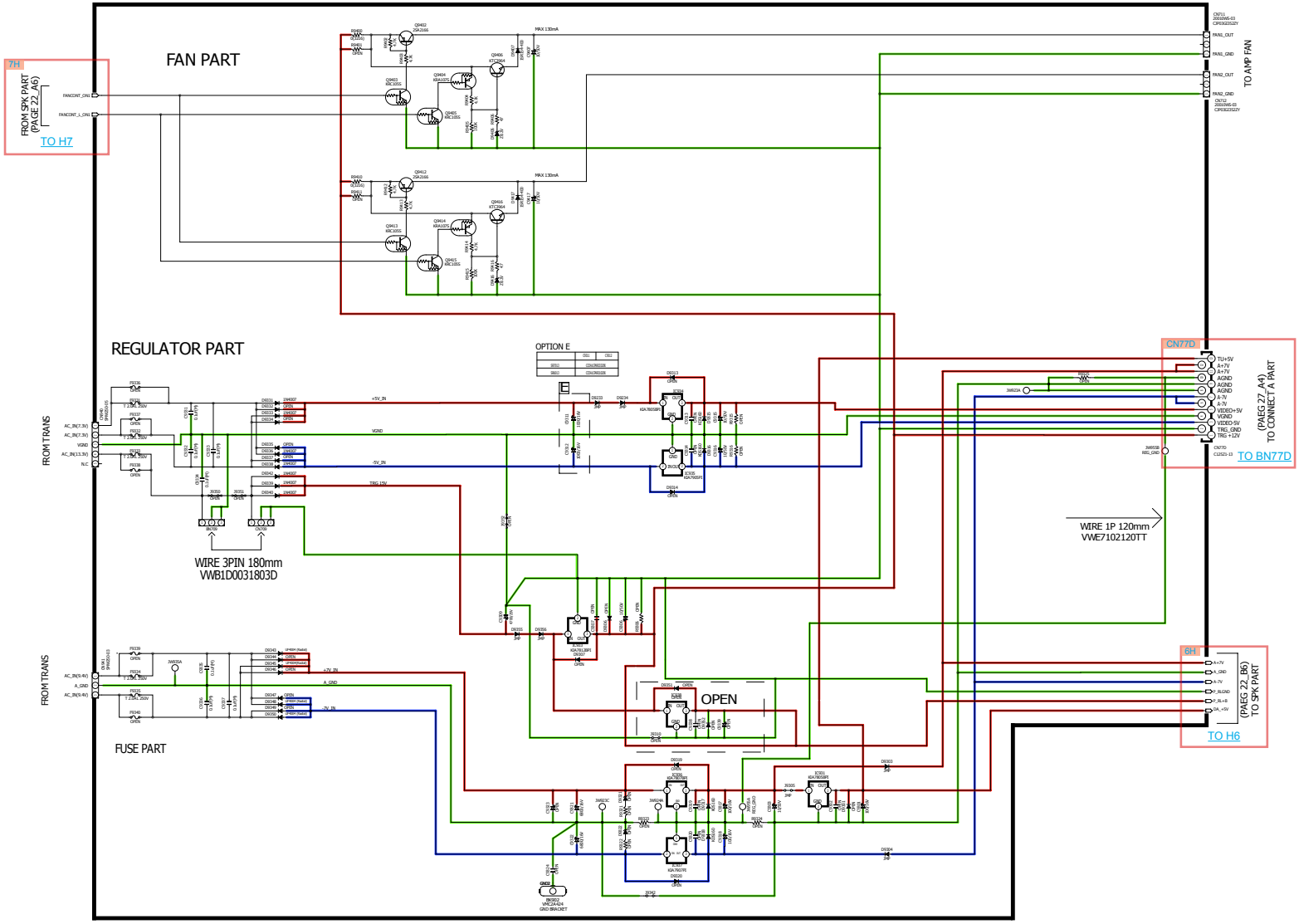

GND LINE POWER+ LINE POWER- LINE ANALOG AUDIO DIGITAL AUDIO TMDS SIGNAL ANALOG VIDEO DIGITAL VIDEO STBY POWER

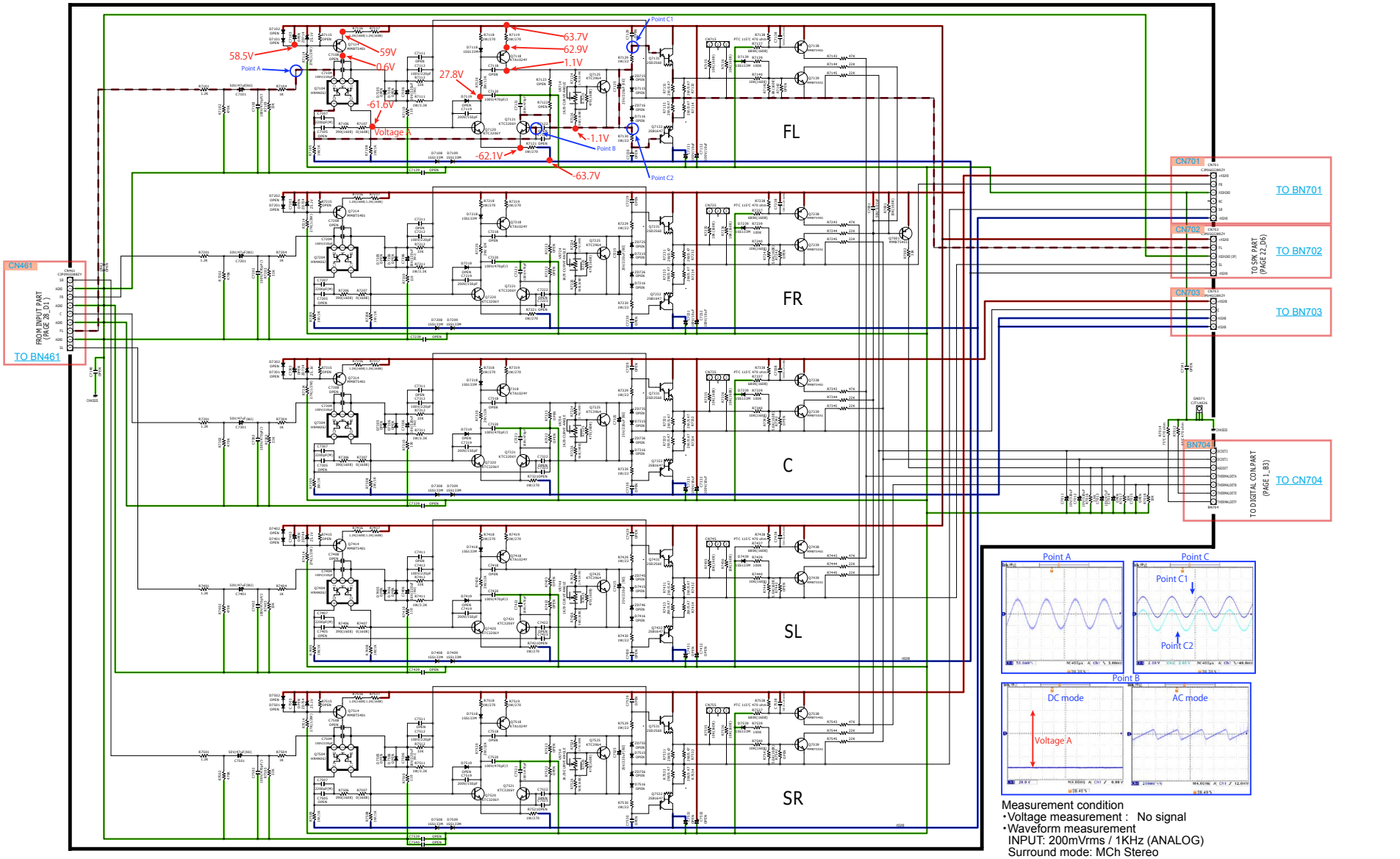

Measurement condition
・Voltage measurement : No signal
・Waveform measurement
INPUT: 200mVrms / 1KHz (ANALOG)
Surround mode: MCh Stereo
VOL: 70
Speaker load: 8ohms

GND LINE POWER+ LINE POWER- LINE ANALOG AUDIO DIGITAL AUDIO TMDS SIGNAL ANALOG VIDEO DIGITAL VIDEO STBY POWER

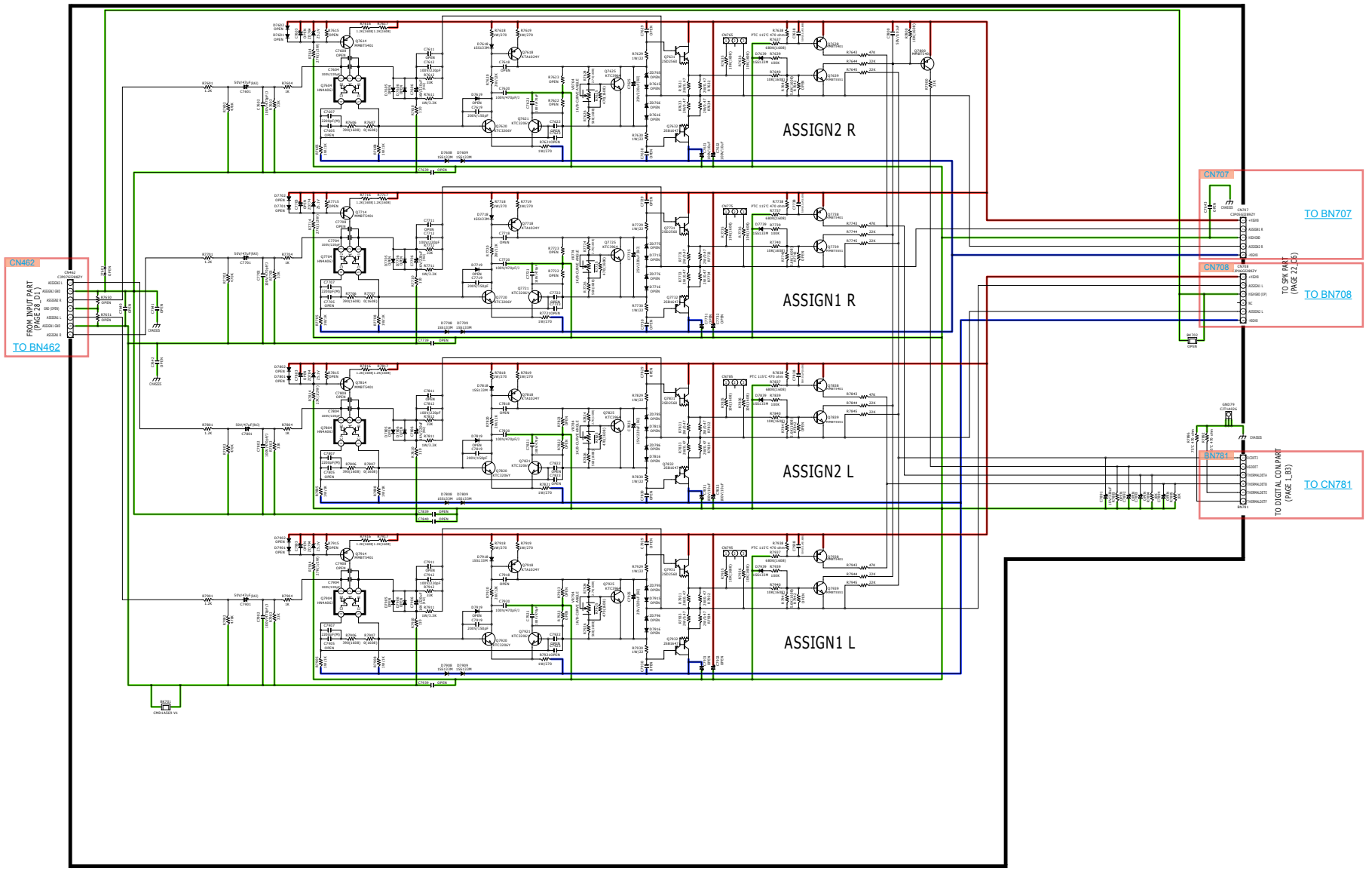

GND LINE POWER+ LINE POWER- LINE ANALOG AUDIO DIGITAL AUDIO TMDS SIGNAL ANALOG VIDEO DIGITAL VIDEO STBY POWER

SR6013
FRONT B'D

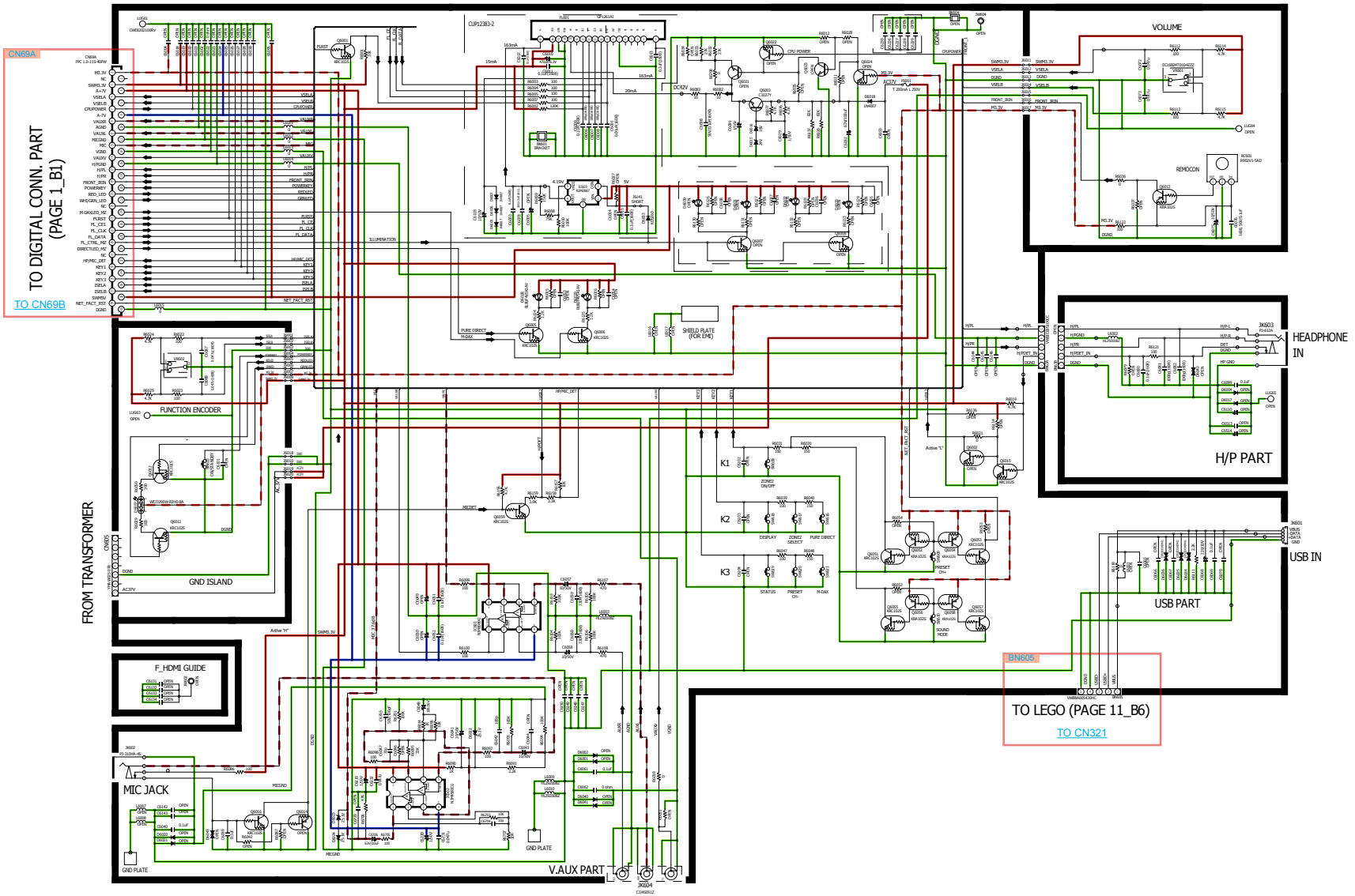

GND LINE | POWER+ LINE | POWER- LINE | ANALOG AUDIO | DIGITAL AUDIO | TMDS SIGNAL | ANALOG VIDEO | DIGITAL VIDEO | STBY POWER

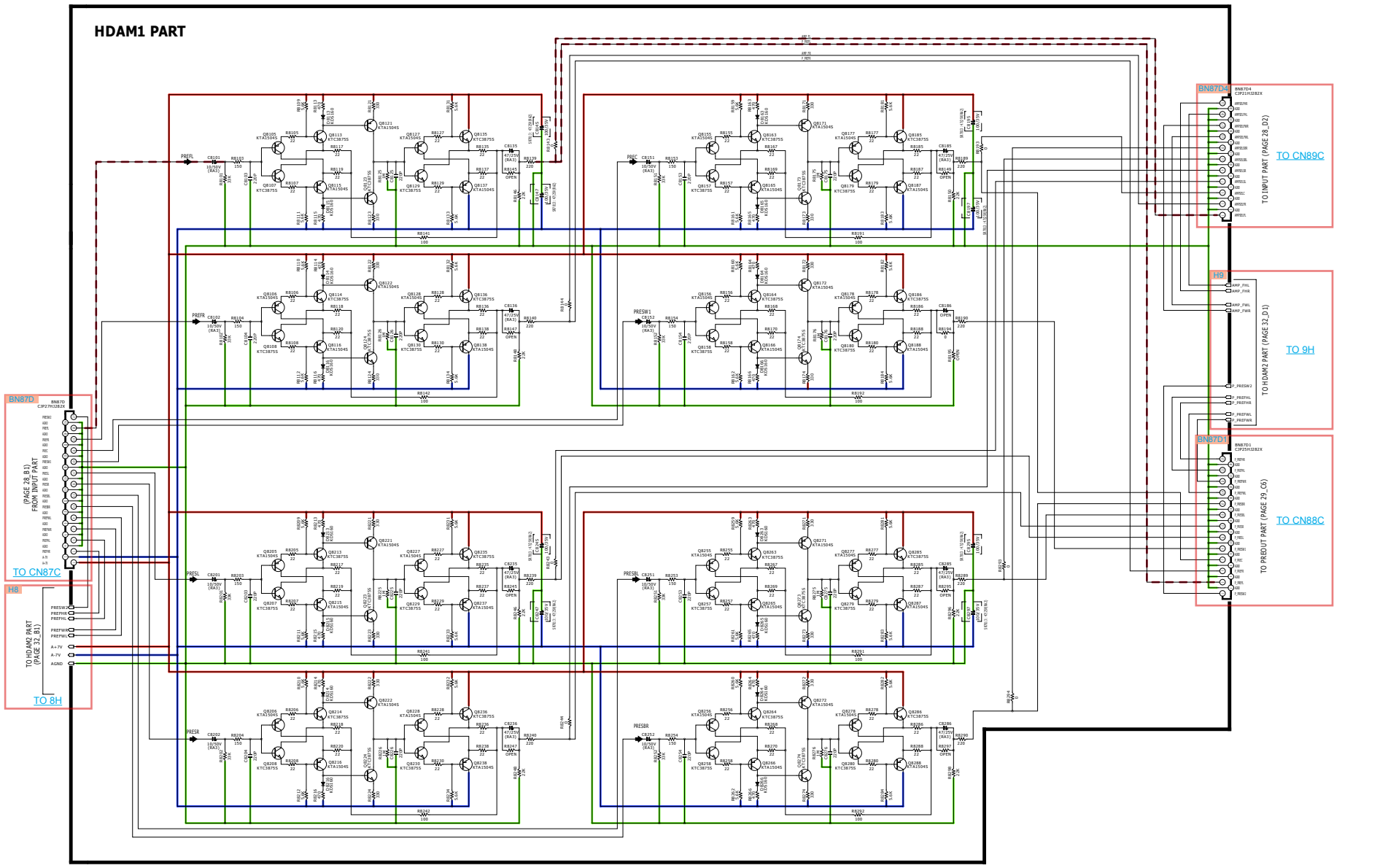

GND LINE POWER+ LINE POWER- LINE ANALOG AUDIO DIGITAL AUDIO TMDS SIGNAL ANALOG VIDEO DIGITAL VIDEO STBY POWER

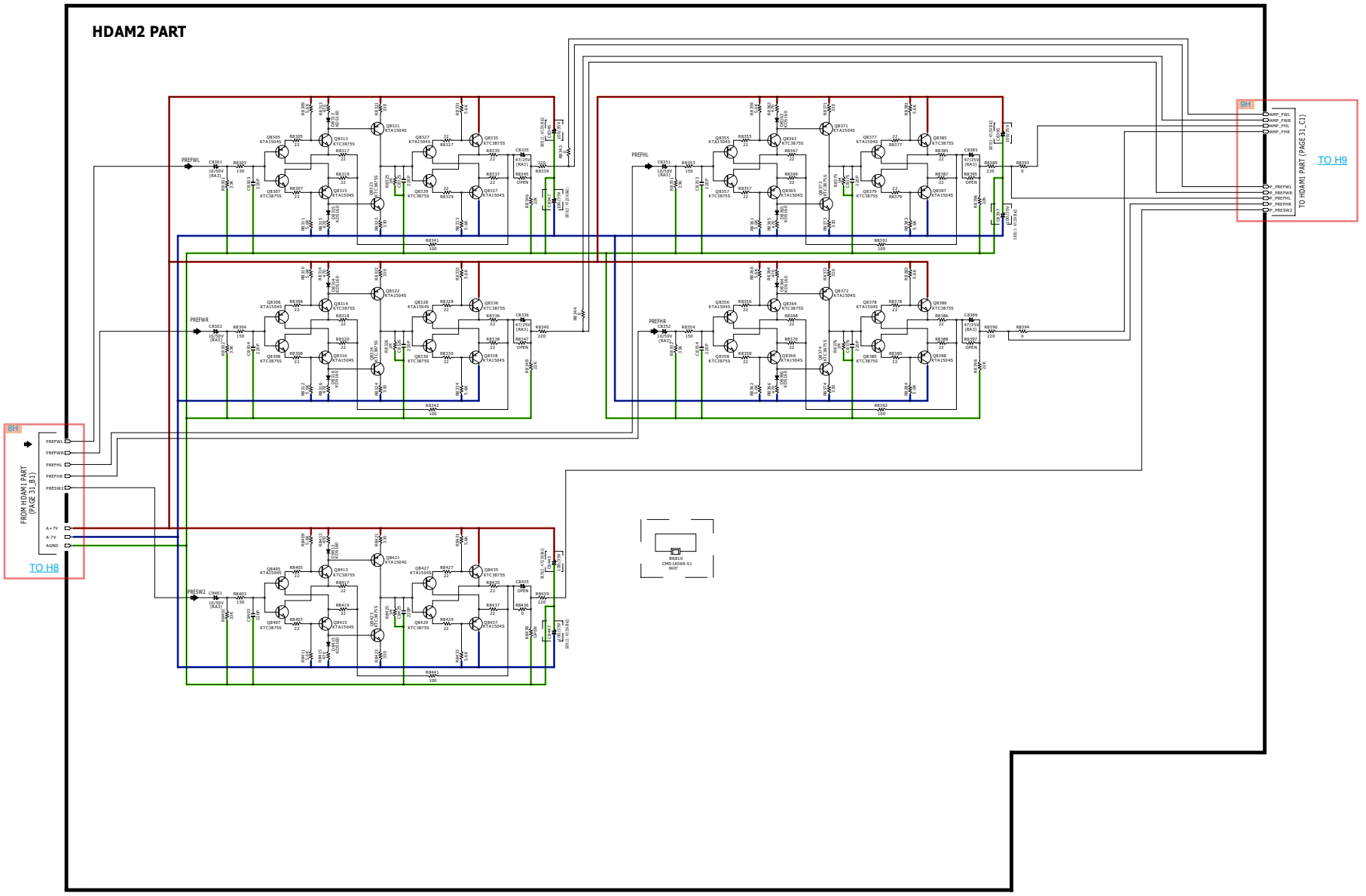

GND LINE POWER+ LINE POWER- LINE ANALOG AUDIO DIGITAL AUDIO TMDS SIGNAL ANALOG VIDEO DIGITAL VIDEO STBY POWER

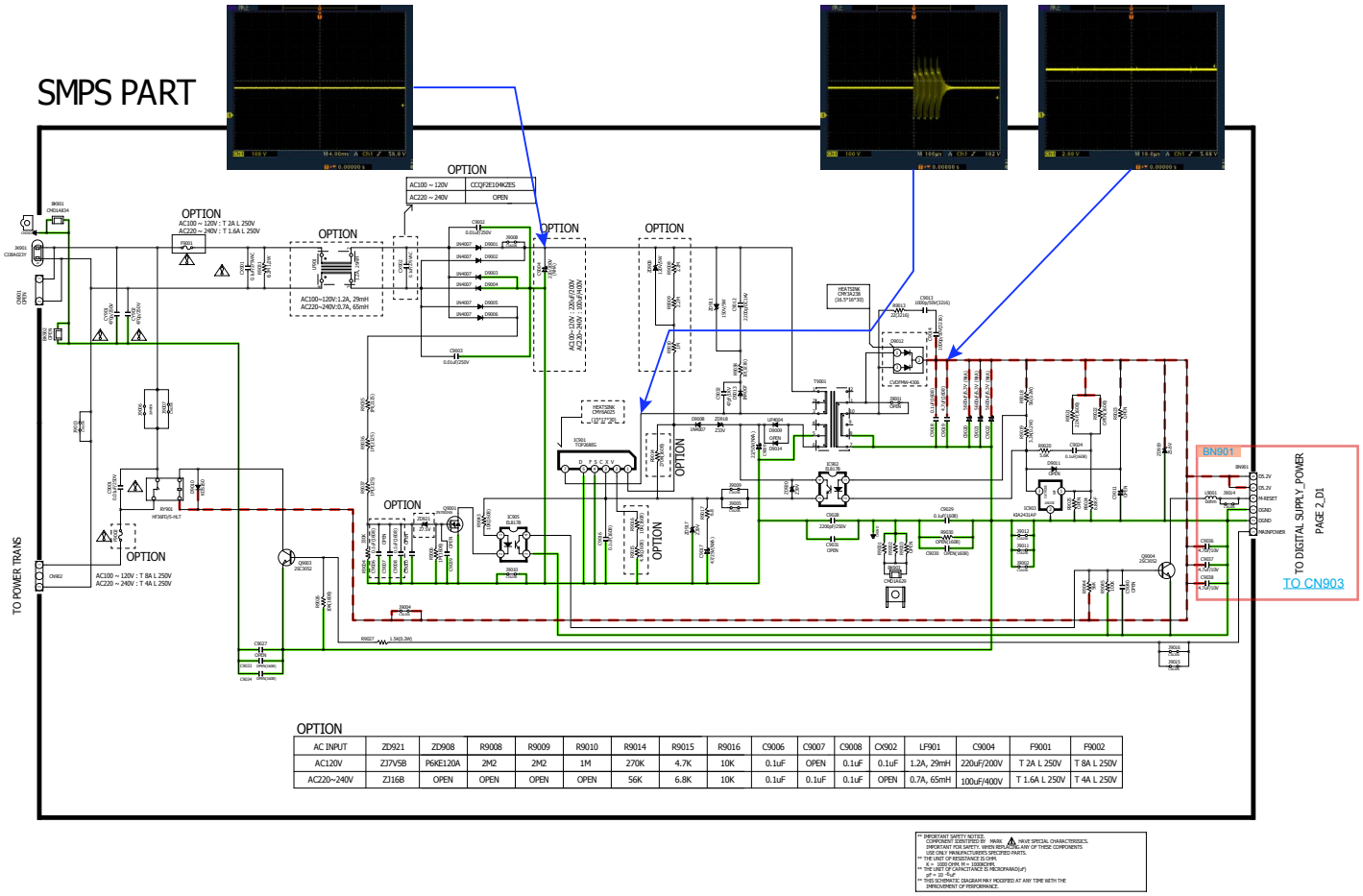

OPTION

AC INPUT	ZD921	ZD908	R9008	R9009	R9010	R9014	R9015	R9016	C9006	C9007	C9008	CX902	LF901	C9004	F9001	F9002
AC120V	Z7V5B	P6KE120A	2M2	2M2	1M	270K	4.7K	10K	0.1uF	OPEN	0.1uF	0.1uF	1.2A, 29mH	220uF/200V	T 2A L 250V	T 8A L 250V
AC220~240V	ZJ16B	OPEN	OPEN	OPEN	OPEN	56K	6.8K	10K	0.1uF	0.1uF	0.1uF	OPEN	0.7A, 65mH	100uF/400V	T 1.6A L 250V	T 4A L 250V

GND LINE | POWER+ LINE | POWER- LINE | ANALOG AUDIO | DIGITAL AUDIO | TMDS SIGNAL | ANALOG VIDEO | DIGITAL VIDEO | STBY POWER

DIGITAL

Lead-free Solder
When soldering, use the Lead-free Solder (Sn-Ag-Cu).

DIGITAL (A SIDE)

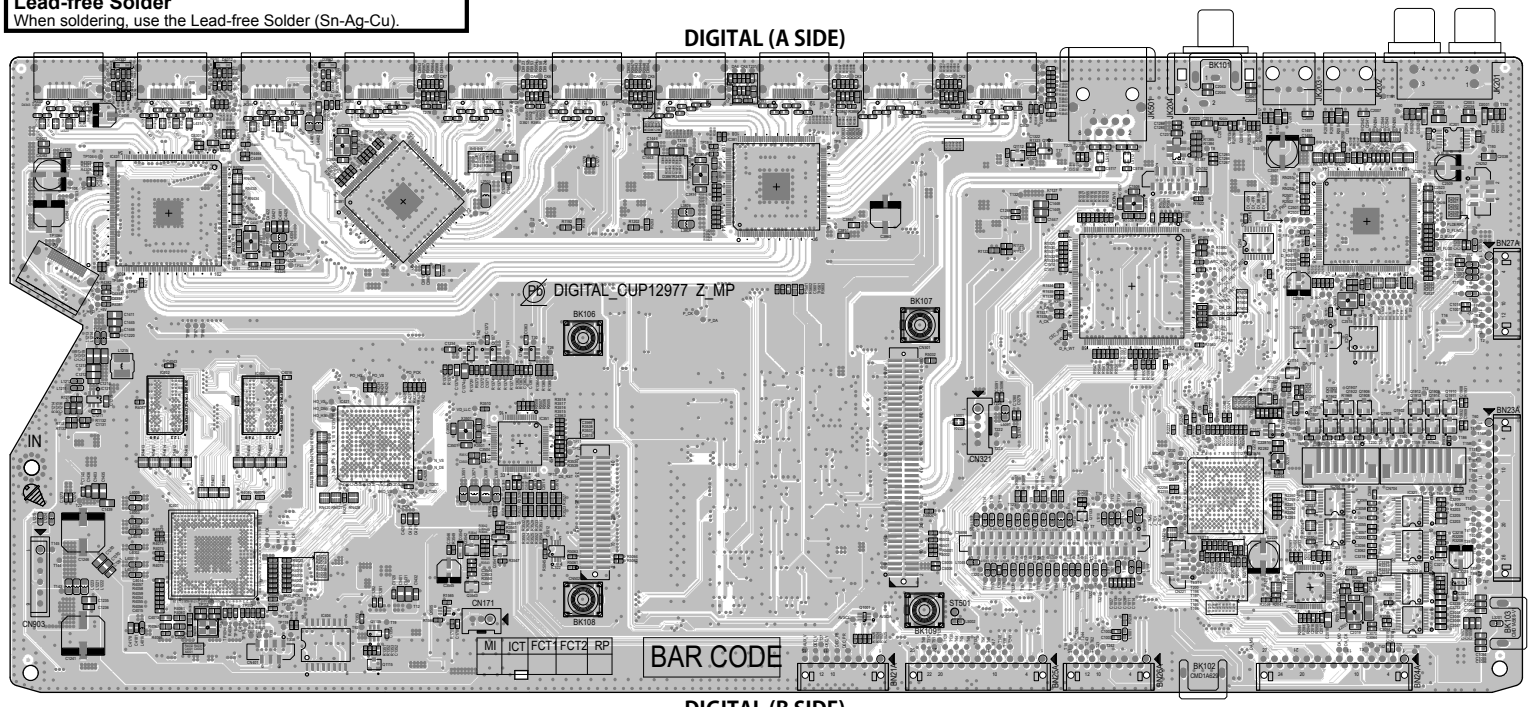

DIGITAL (B SIDE)

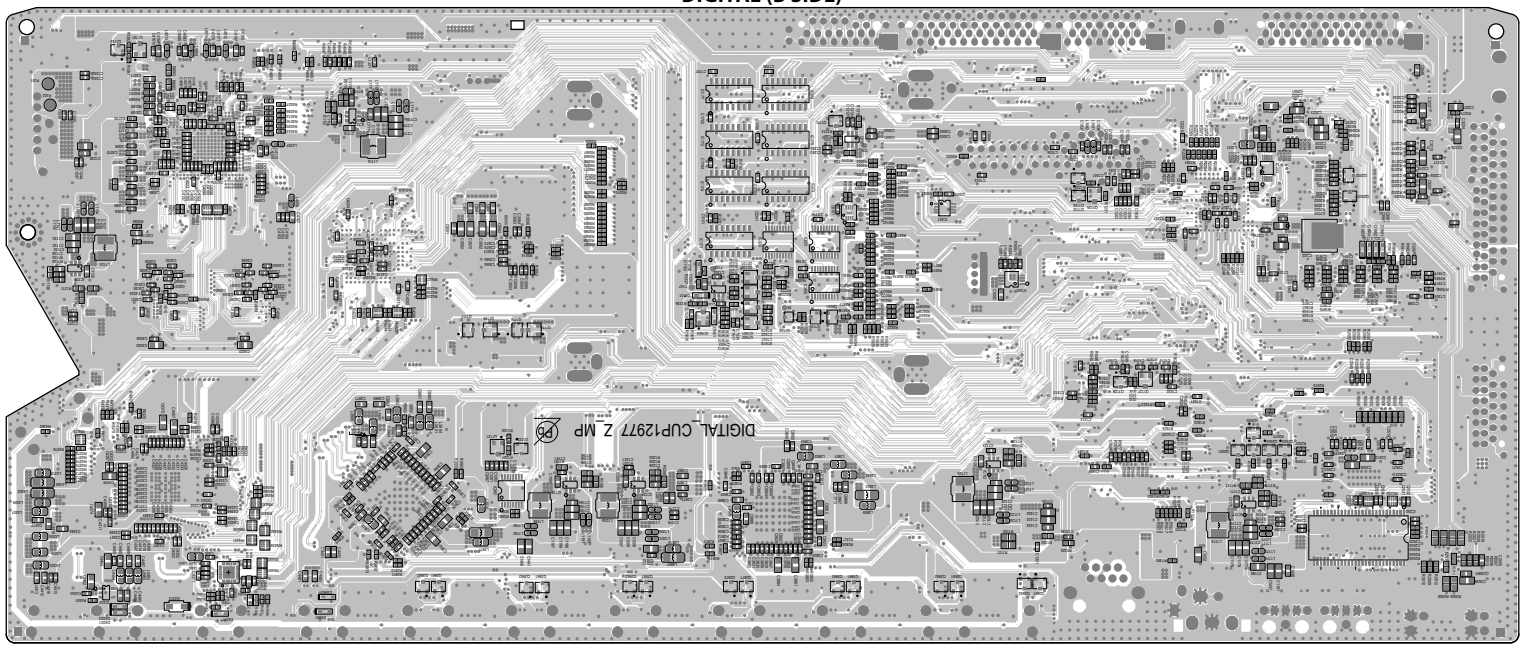

INPUT, F-HDMI, CONNECT-2, CONNECT-3, CONNECT-4

INPUT (A SIDE)

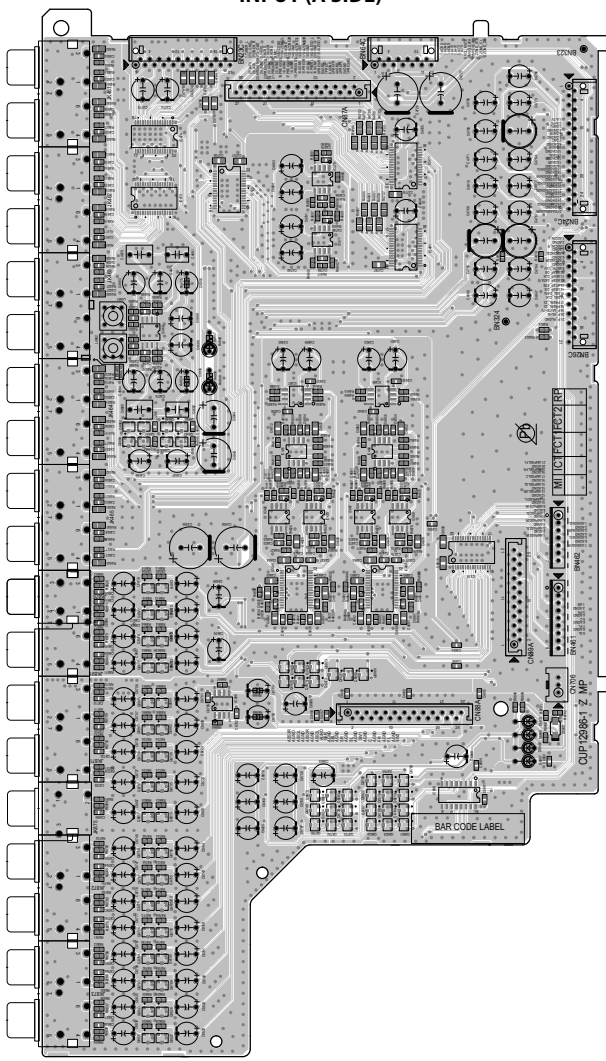

INPUT (B SIDE)

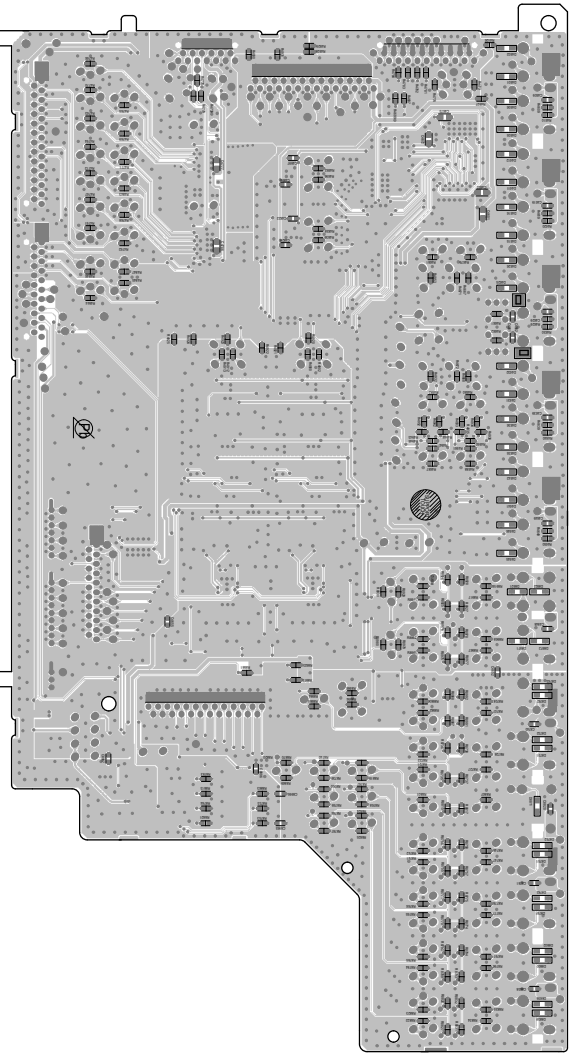

F_HDMI (A SIDE)

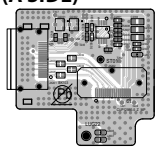

F_HDMI (B SIDE)

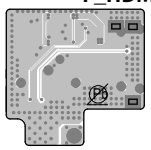

CONNECT-2 (A SIDE)

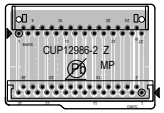

CONNECT-2 (B SIDE)

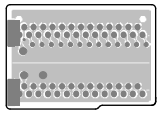

CONNECT-3 (A SIDE)

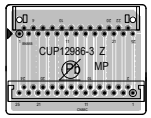

CONNECT-3 (B SIDE)

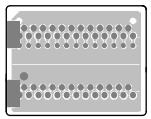

CONNECT-4 (A SIDE)

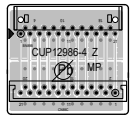

CONNECT-4 (B SIDE)

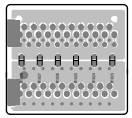

VIDEO, SIDE CNT, FRONT CONT FFC

VIDEO (A SIDE)

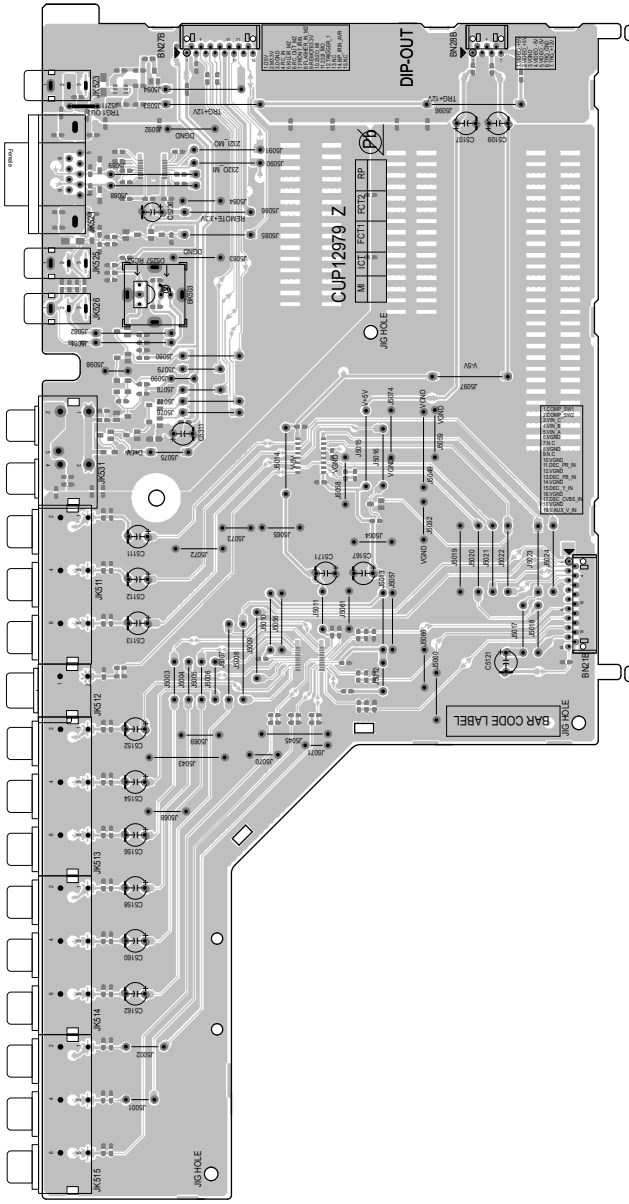

VIDEO (B SIDE)

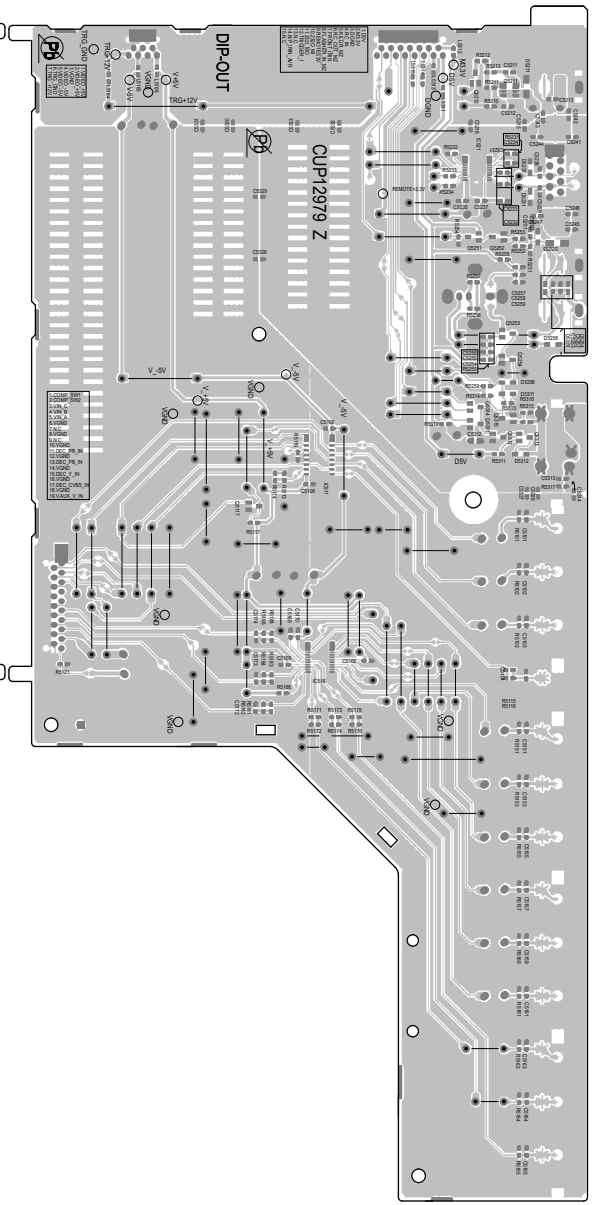

SIDE CNT (A SIDE)

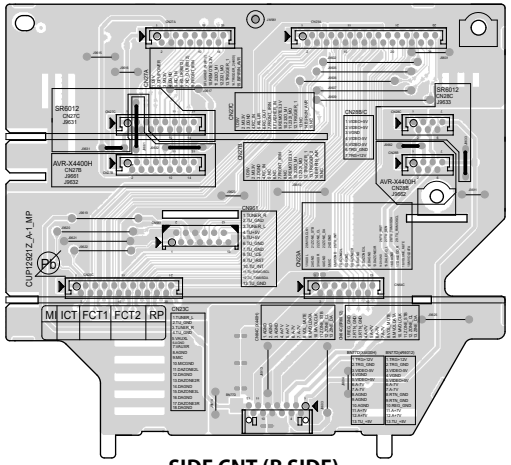

SIDE CNT (B SIDE)

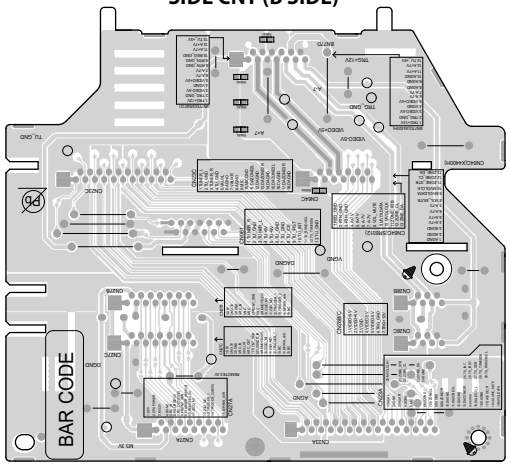

FRONT CONT FFC (A SIDE)

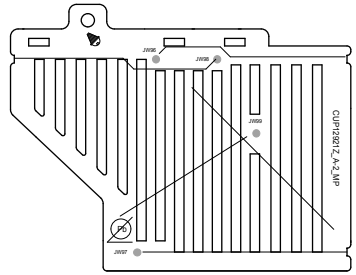

SPK, SPK H2L, GUIDE TRANS, GUIDE SIDE

SPK (A SIDE)

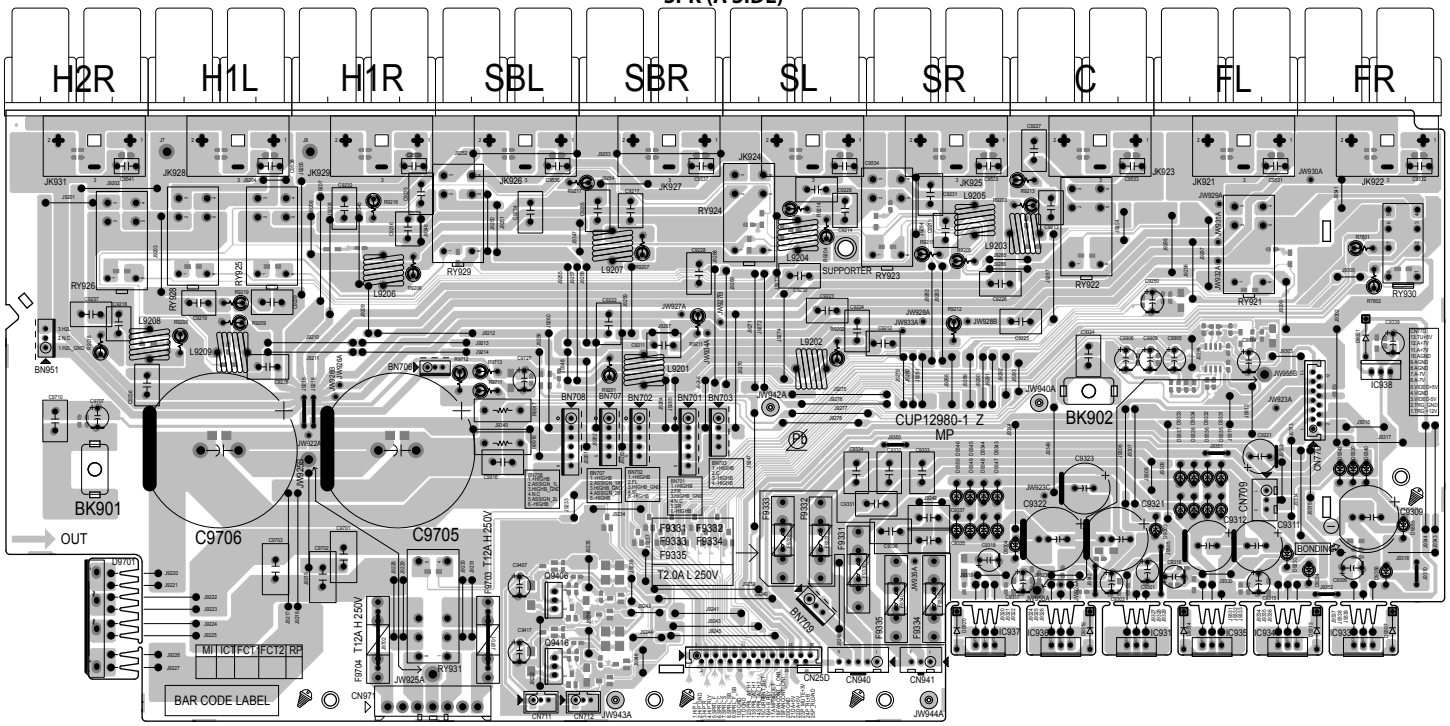

SPK (B SIDE)

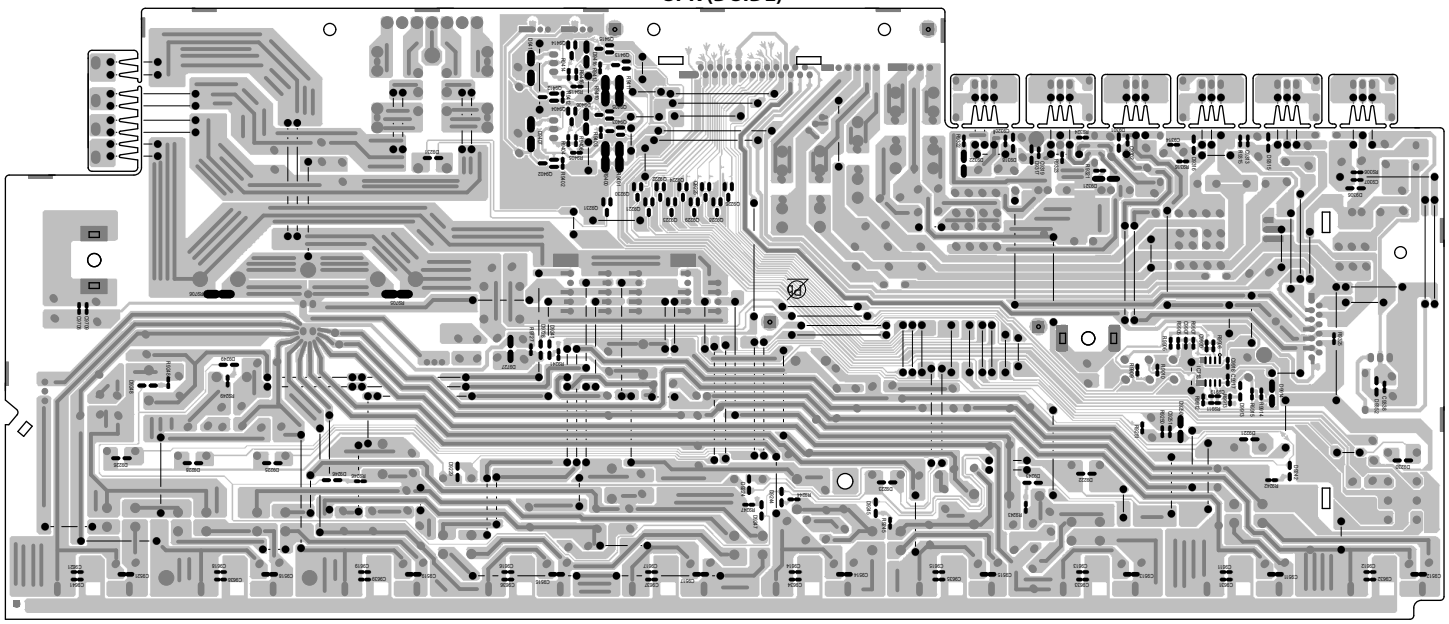

SPK H2L (A SIDE)

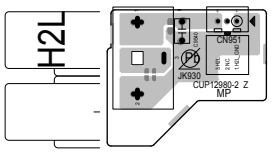

SPK H2L (A SIDE)

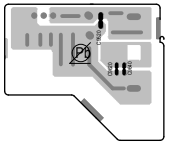

GUIDE TRANS (A SIDE)

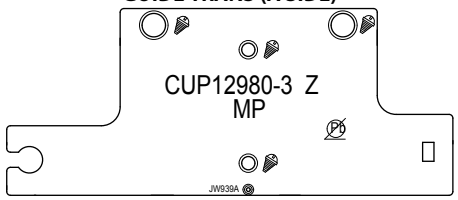

GUIDE SIDE (A SIDE)

5CH AMP, 4CH AMP

5CH AMP (A SIDE)

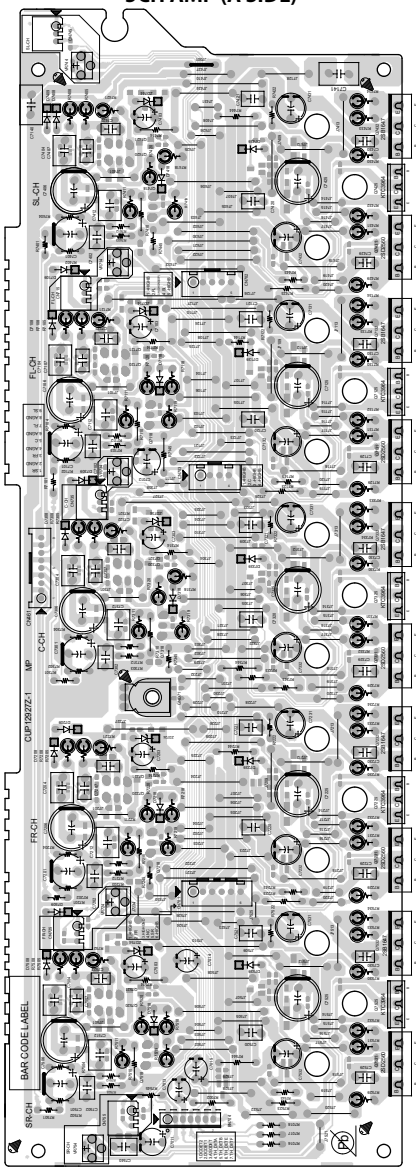

5CH AMP (B SIDE)

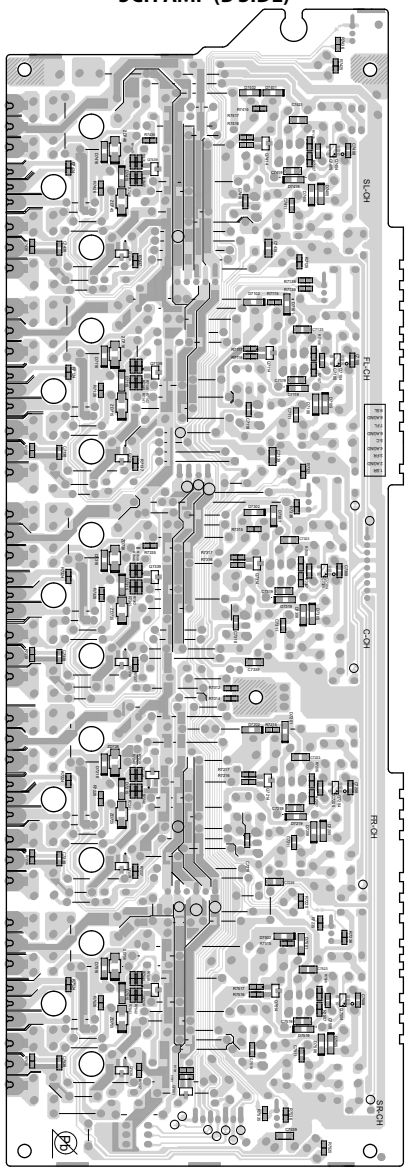

4CH AMP (A SIDE)

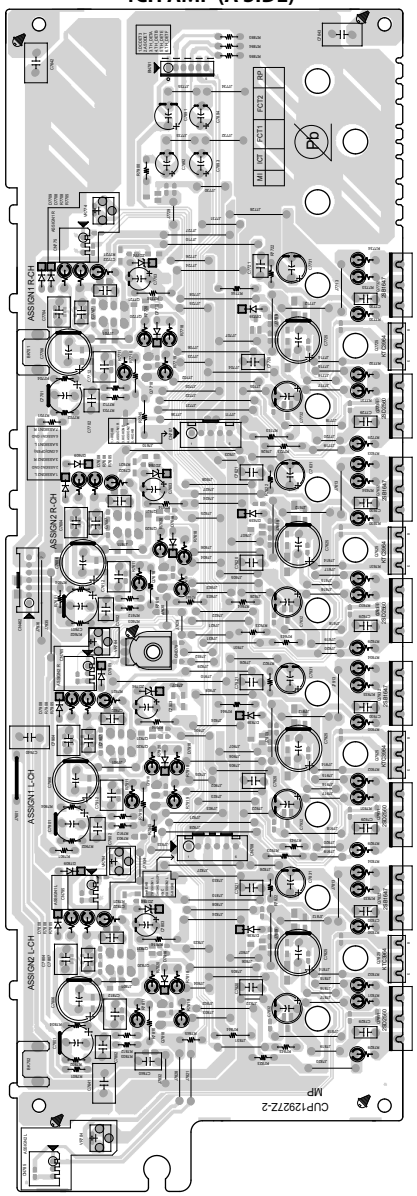

4CH AMP (B SIDE)

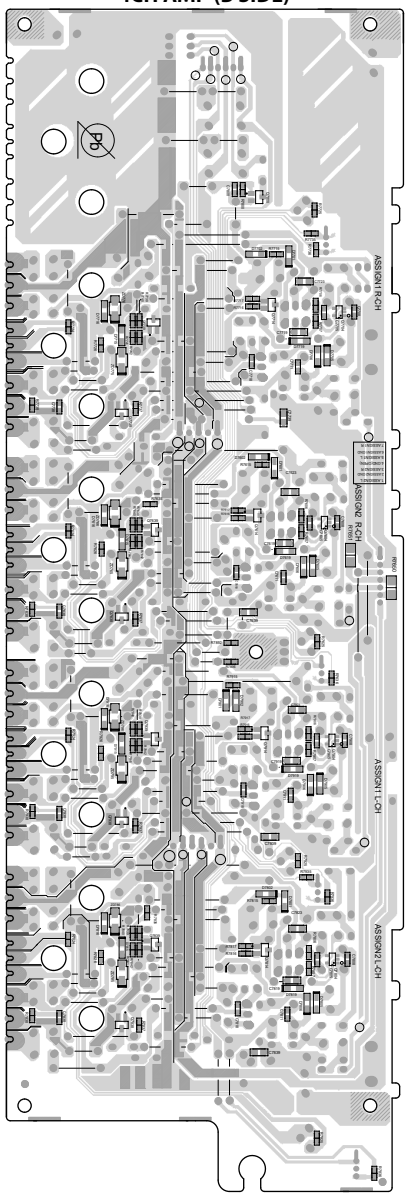

FRONT, HDMI FFC TOP

FRONT (A SIDE)

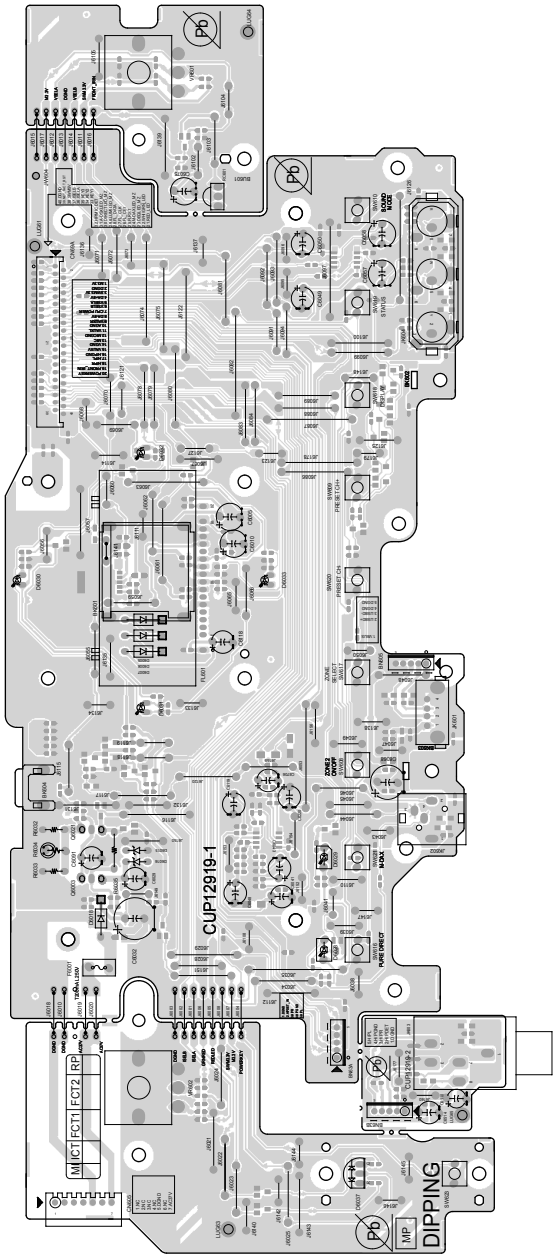

FRONT (B SIDE)

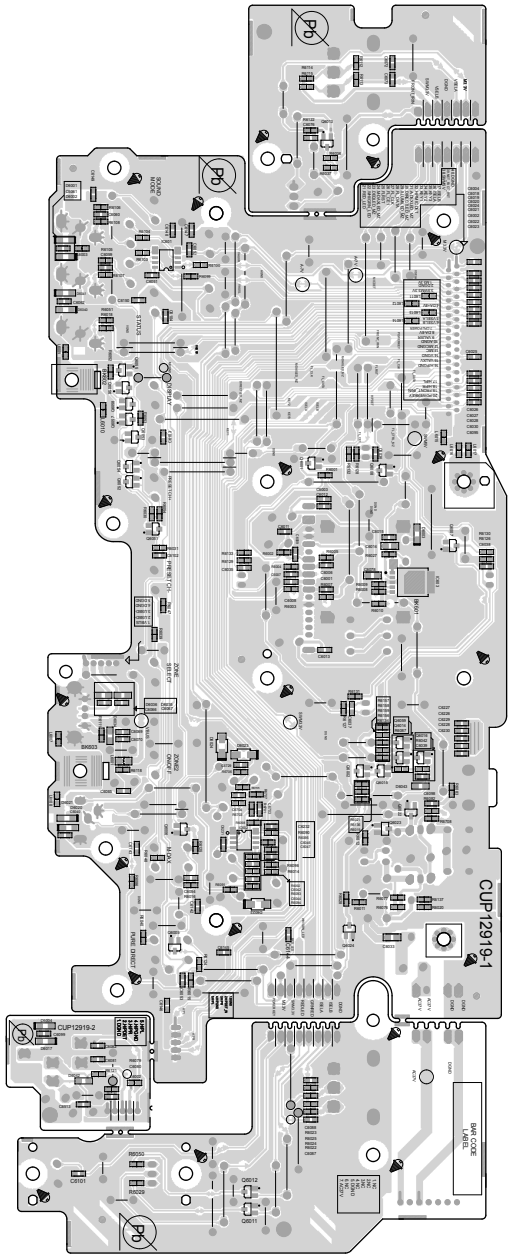

HDMI FFC TOP (A SIDE)

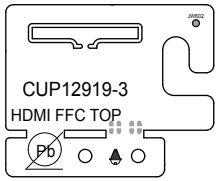

FRONT CNT, TUNER, BKT, HDAM, SMPS

FRONT CNT (A SIDE)

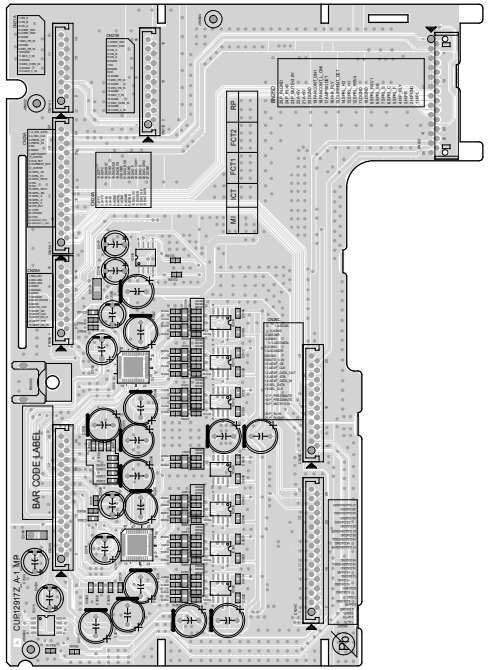

FRONT CNT (B SIDE)

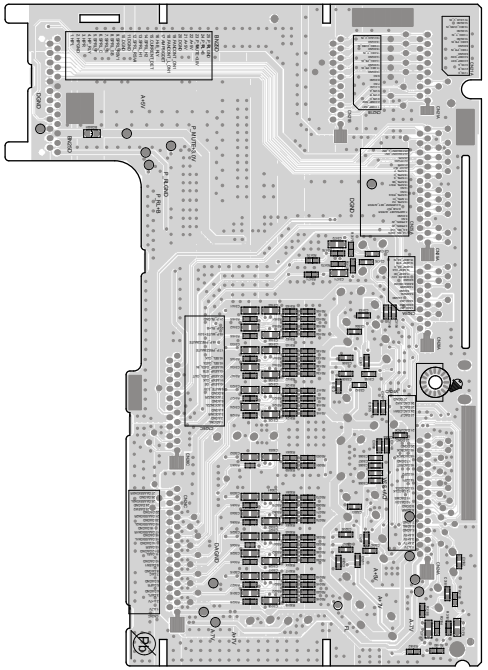

SMPS (A SIDE)

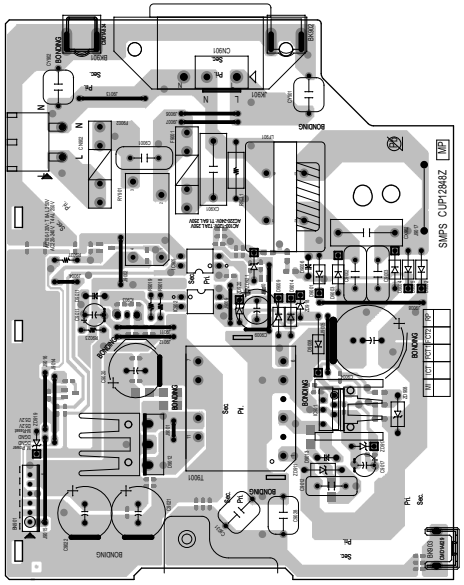

SMPS (B SIDE)

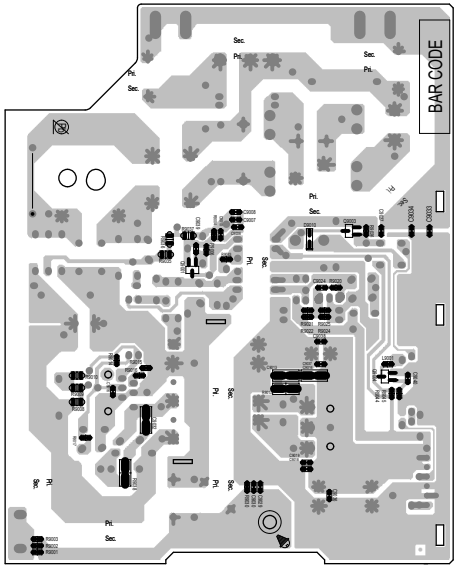

TUNER (A SIDE)

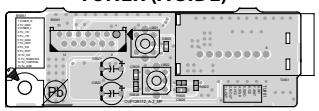

TUNER (B SIDE)

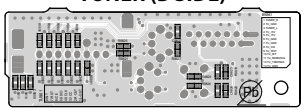

BKT (A SIDE)

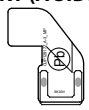

HDAM (A SIDE)

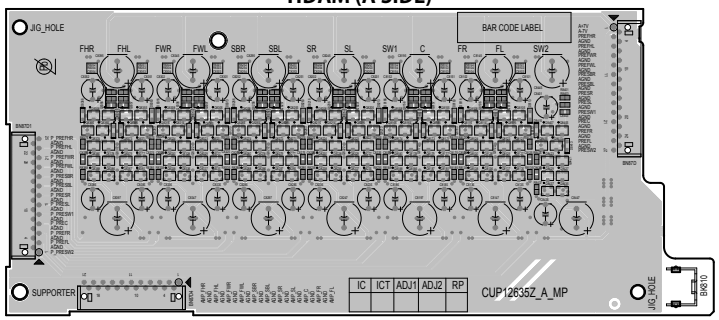

HDAM (B SIDE)

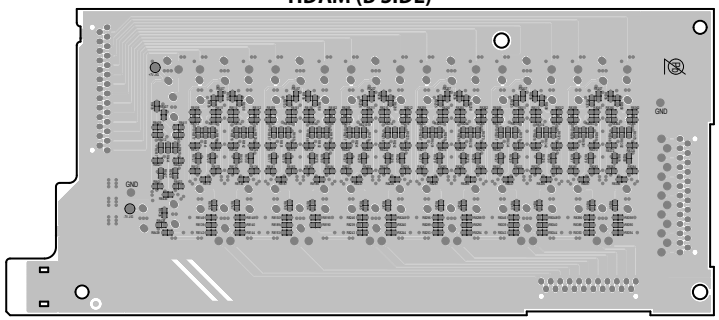

FRONT ch

SR6013
LEVEL DIAGRAM
FRONT ch

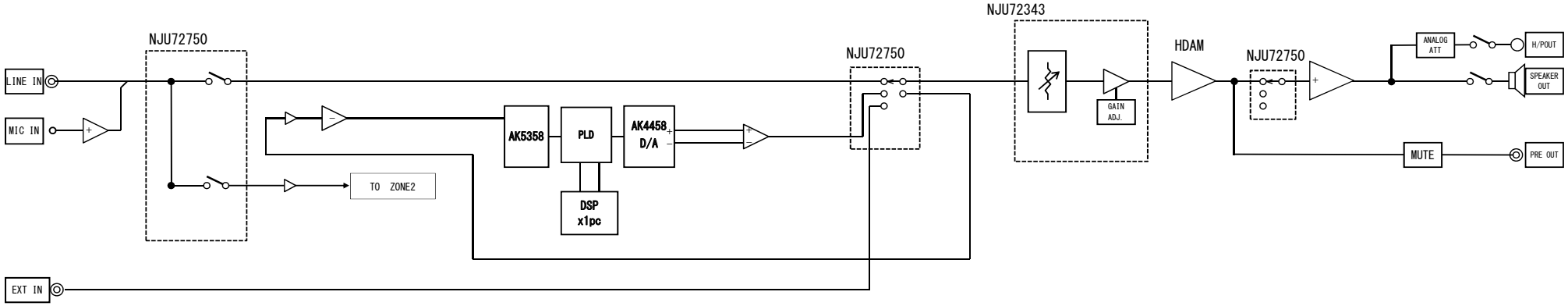

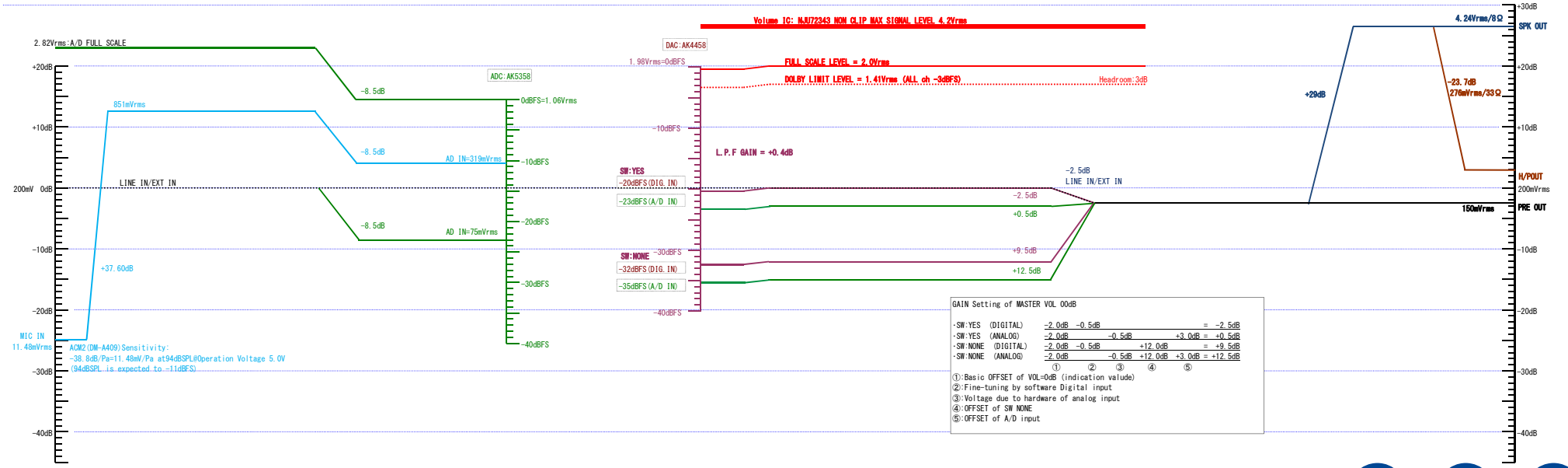

SR6013
LEVEL DIAGRAM
CENTER/SURROUND ch

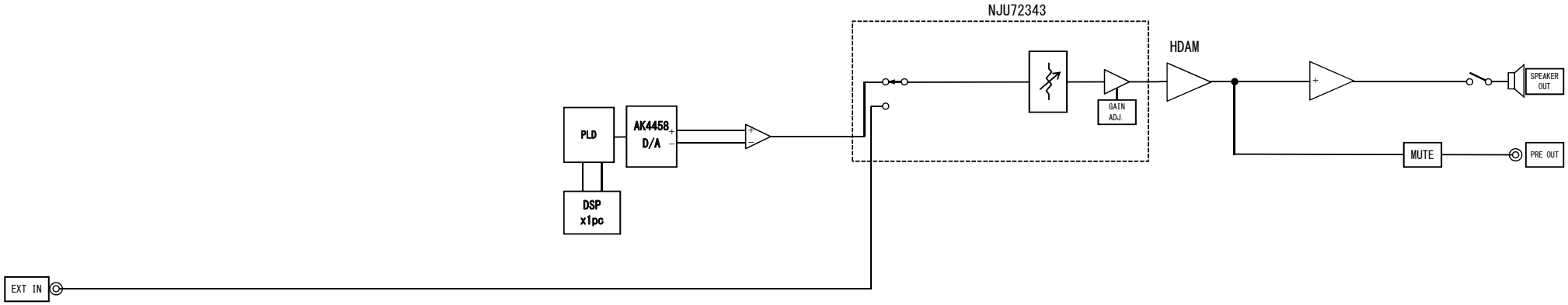

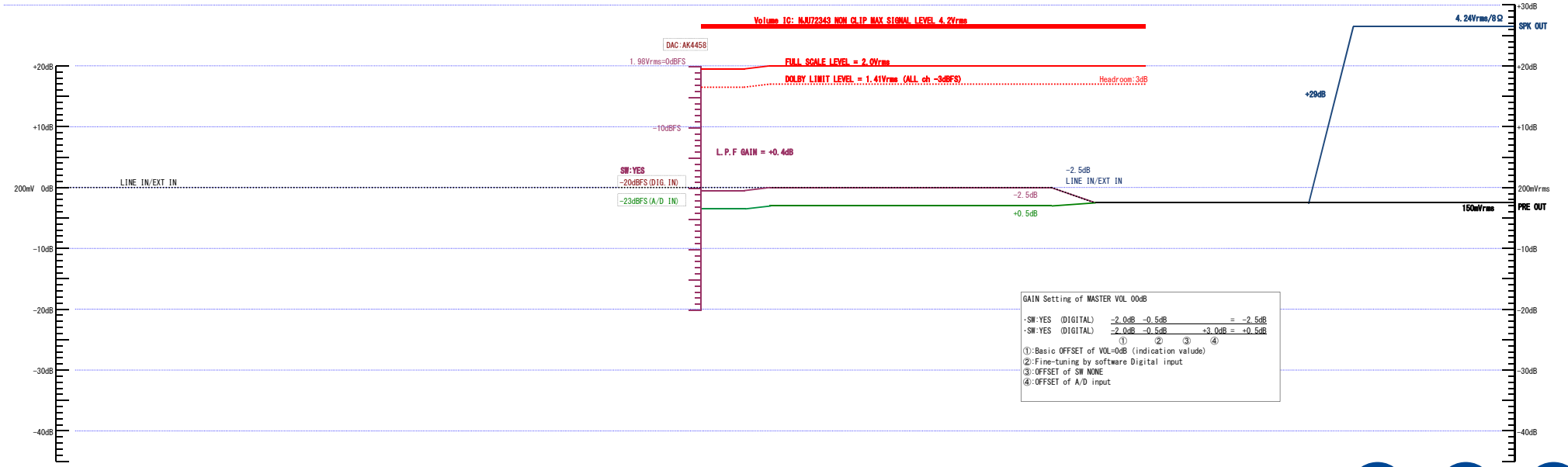

SR6013
LEVEL DIAGRAM
SUB WOOFER ch

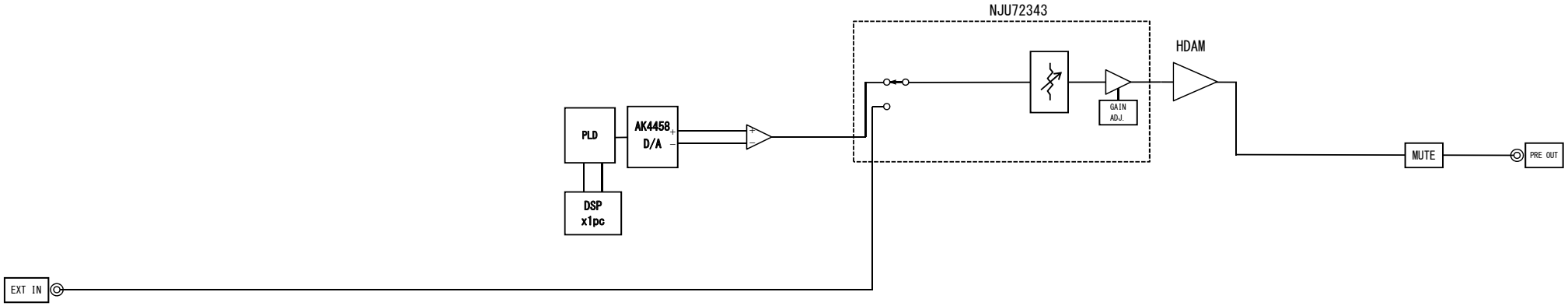

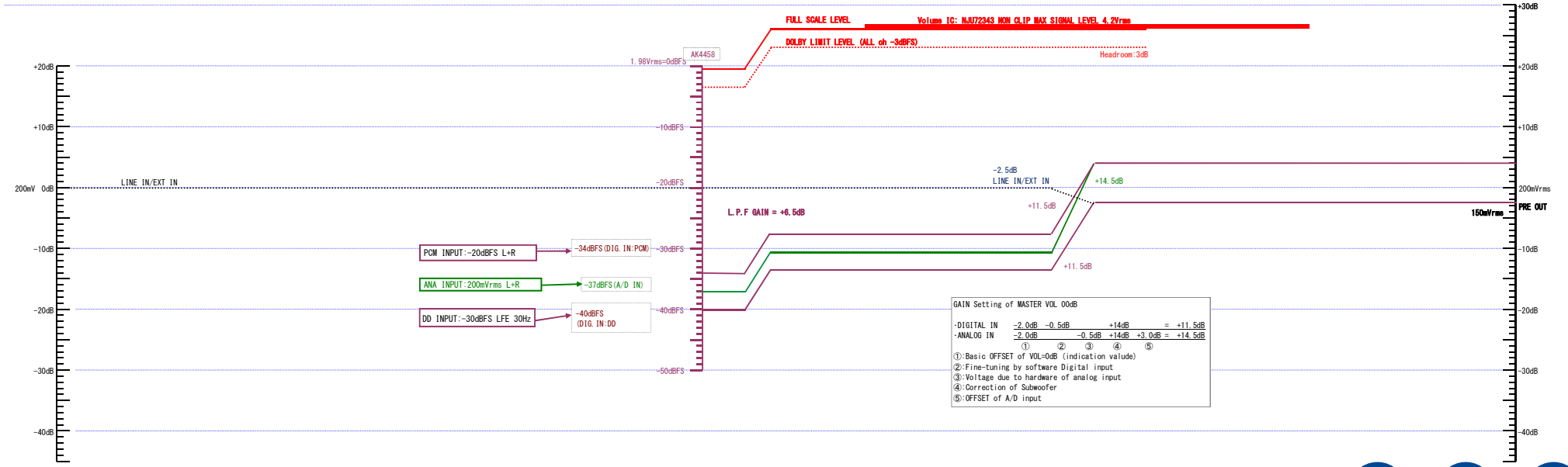

SR6013
LEVEL DIAGRAM
ASSIGN1/2 (SURROUND BACK/HEIGHT1/HEIGHT2) ch

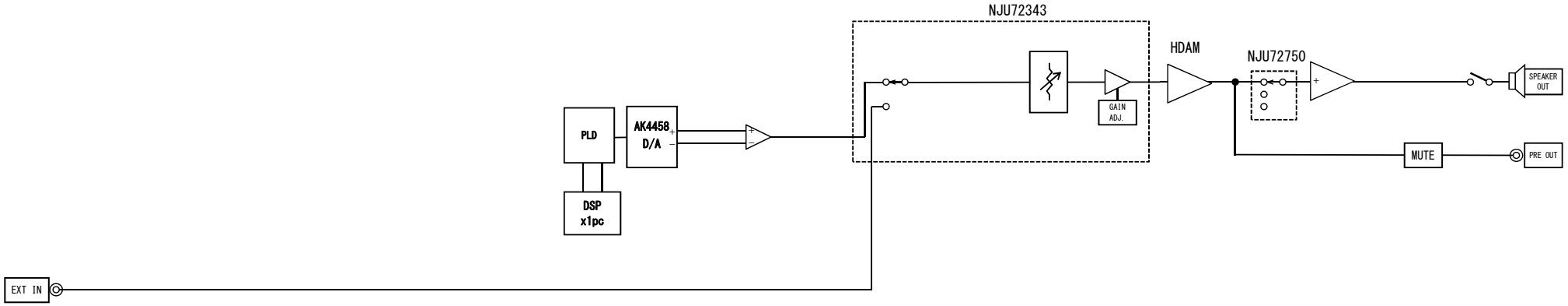

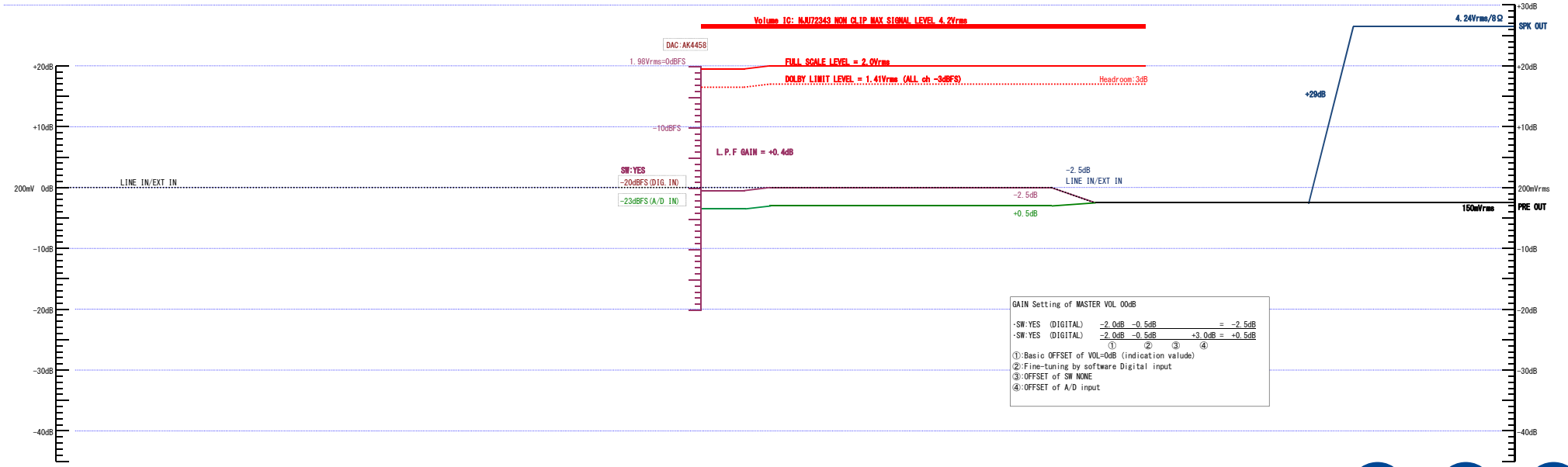

SR6013
LEVEL DIAGRAM
ZONE2

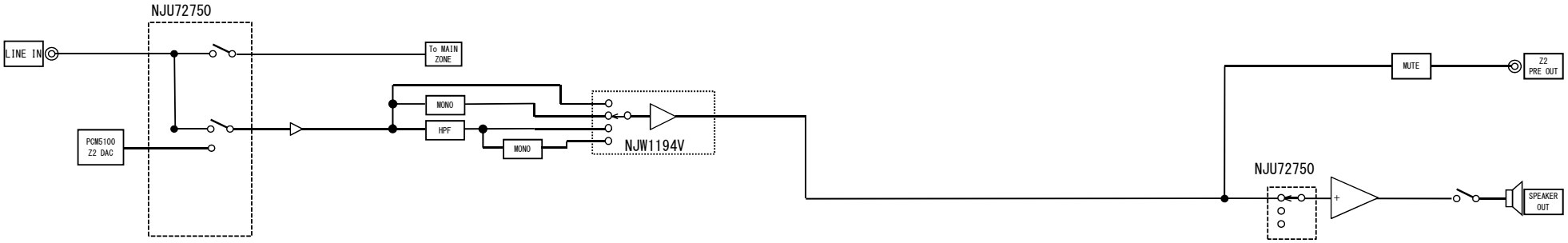

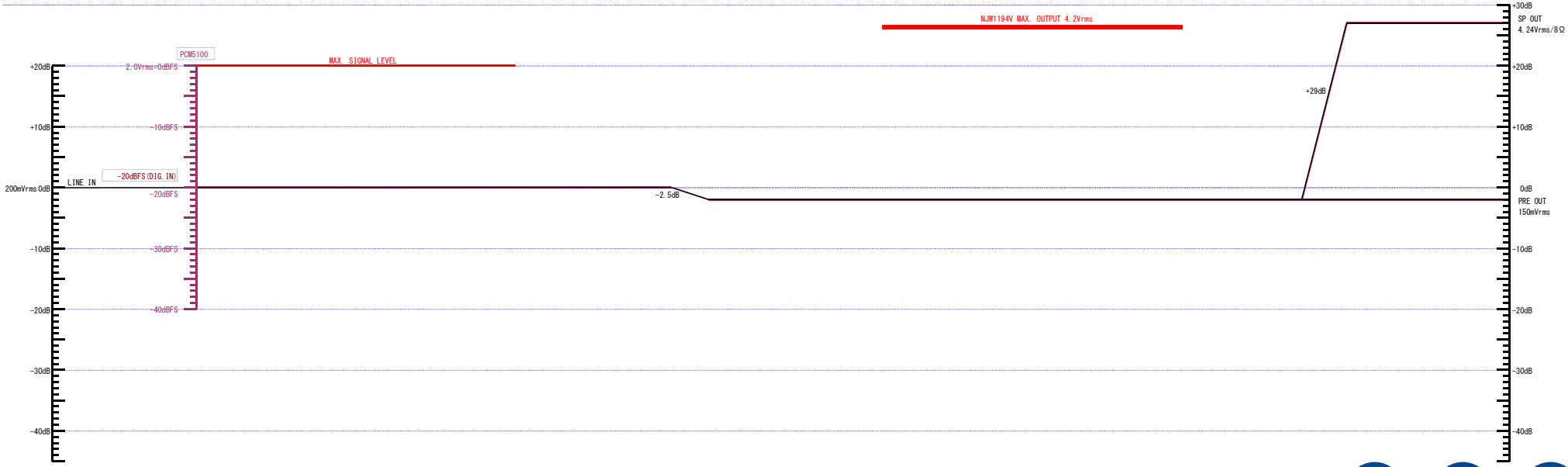

ANALOG AUDIO DIAGRAM

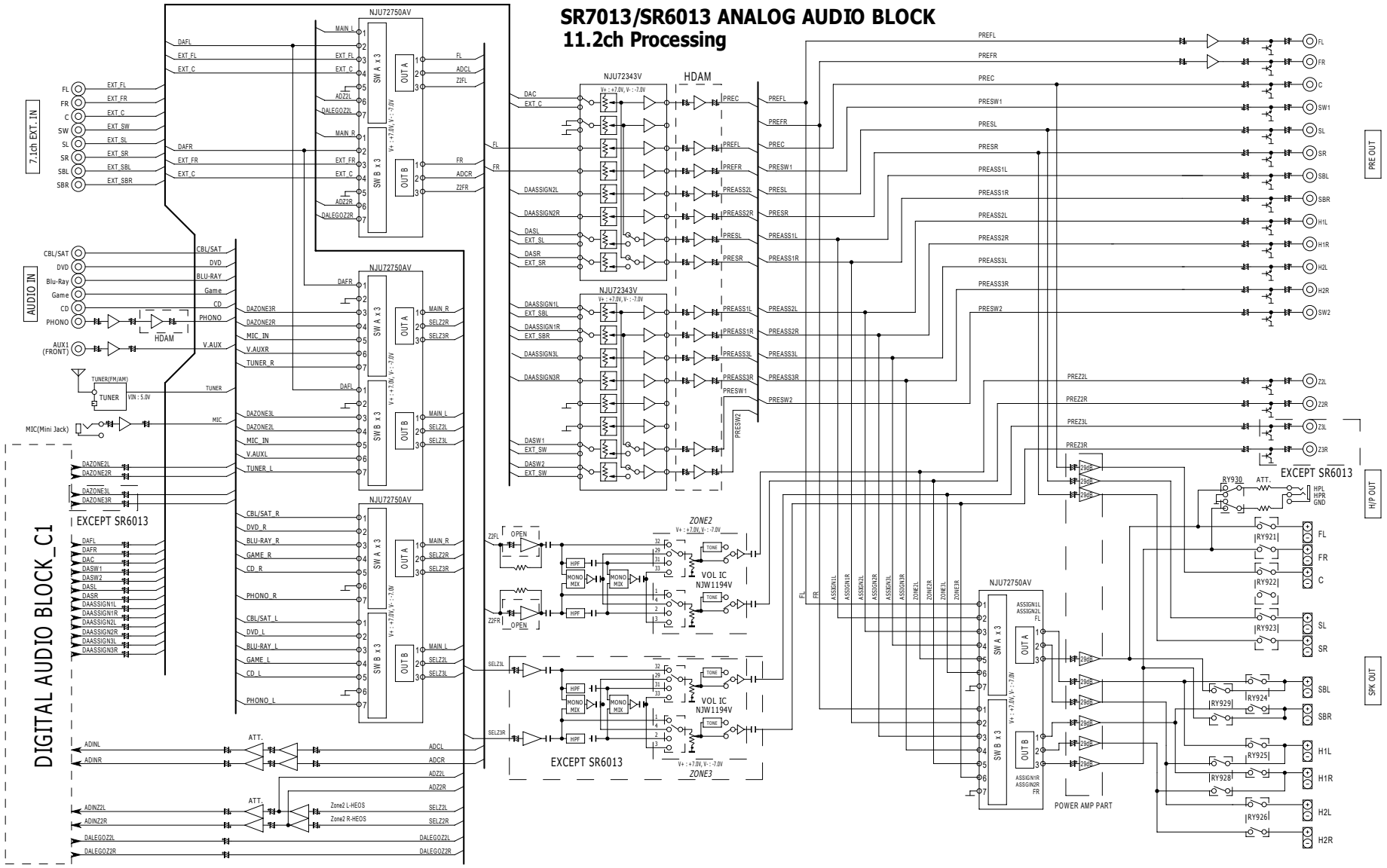

SR6013 DIGITAL AUDIO BLOCK(CIRRUS)

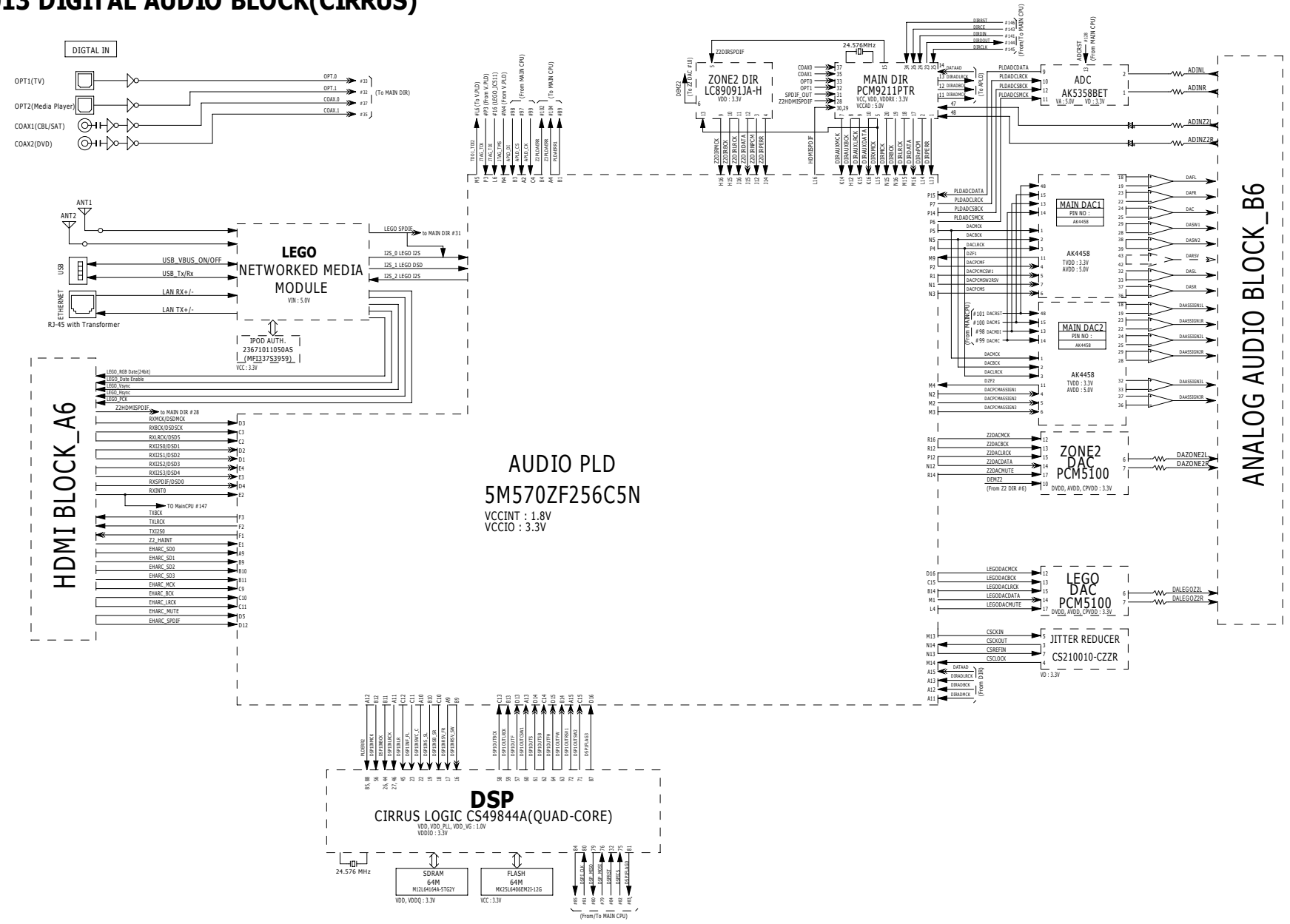

SR6013 ANALOG VIDEO BLOCK

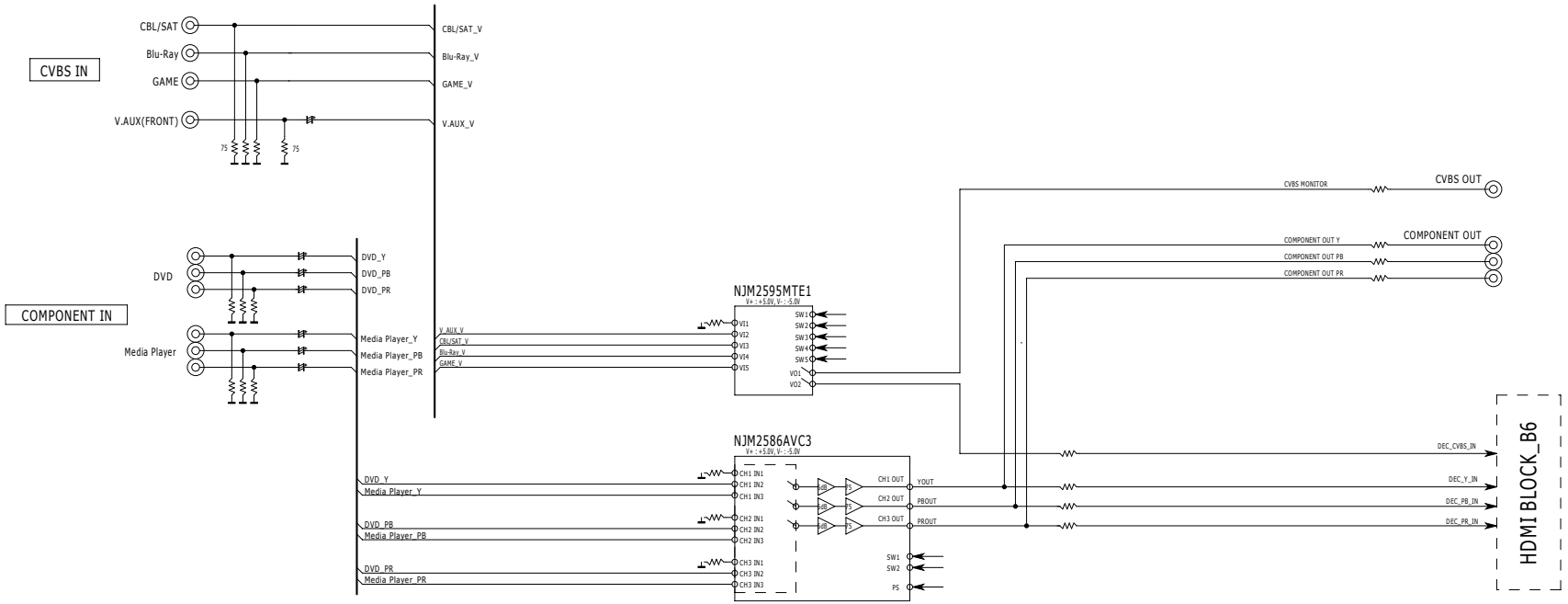

SR7013/AV7705/SR6013 HDMI BLOCK

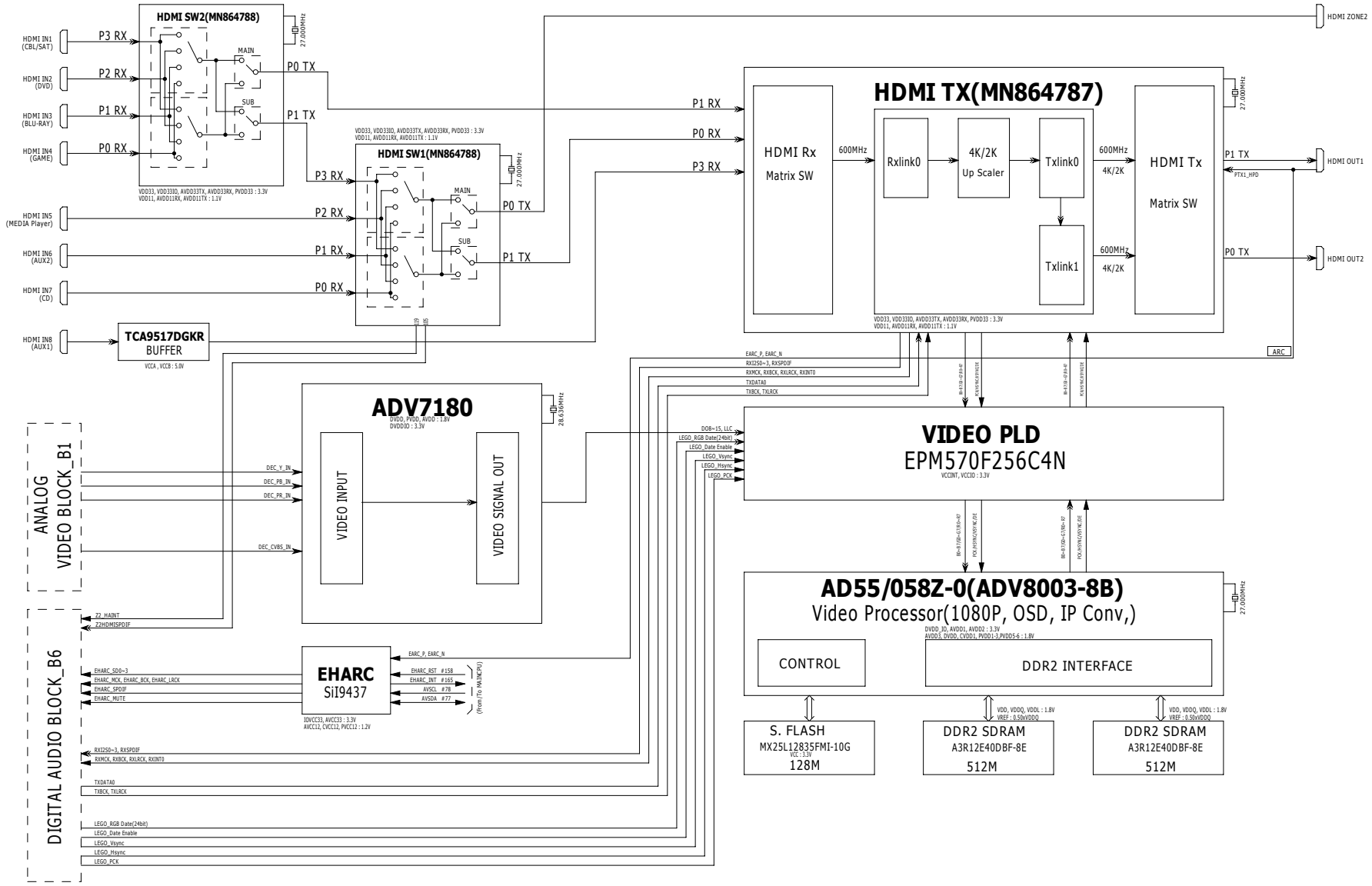

SR6013 POWER BLOCK DIAGRAM

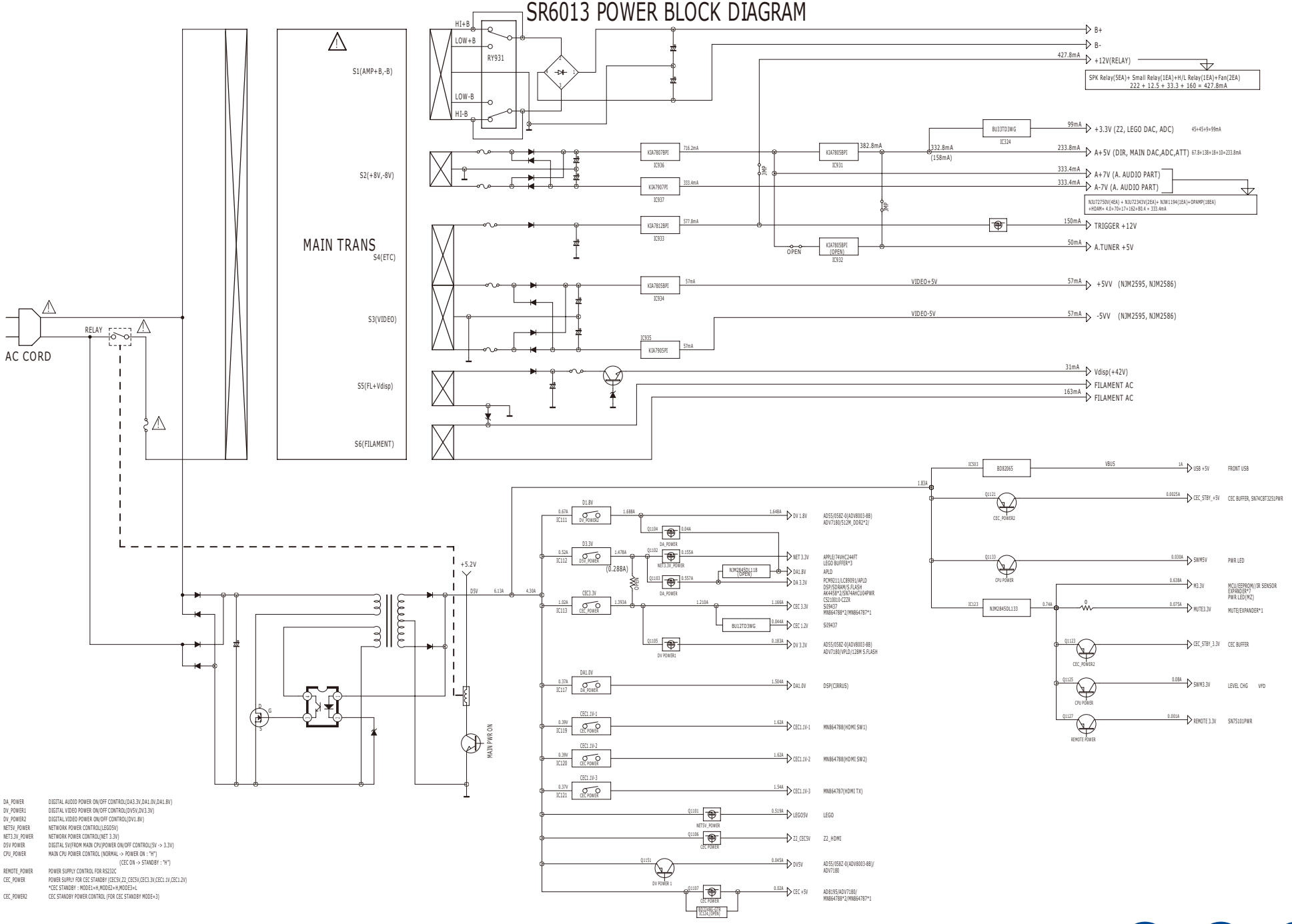

DA_POWER DIGITAL AUDIO POWER ON/OFF CONTROL(DA3.3V,DA1.0V,DA1.8V)
DV_POWER1 DIGITAL VIDEO POWER ON/OFF CONTROL(DV5V,DV3.3V)
DV_POWER2 DIGITAL VIDEO POWER ON/OFF CONTROL(DV1.8V)
NET5V_POWER NETWORK POWER CONTROL(LEGO5V)
NET3.3V_POWER NETWORK POWER CONTROL(NET 3.3V)
D5V POWER DIGITAL 5V(FROM MAIN CPU)POWER ON/OFF CONTROL(5V -> 3.3V)
CPU_POWER MAIN CPU POWER CONTROL (NORMAL -> POWER ON : "H")
(CEC ON -> STANDBY : "H")
REMOTE_POWER POWER SUPPLY CONTROL FOR RS232C
CEC_POWER POWER SUPPLY FOR CEC STANDBY (CEC5V,Z2_CEC5V,CEC3.3V,CEC1.1V,CEC1.2V)
*CEC STANDBY : MODE1=H,MODE2=H,MODE3=L
CEC_POWER2 CEC STANDBY POWER CONTROL (FOR CEC STANDBY MODE=3)

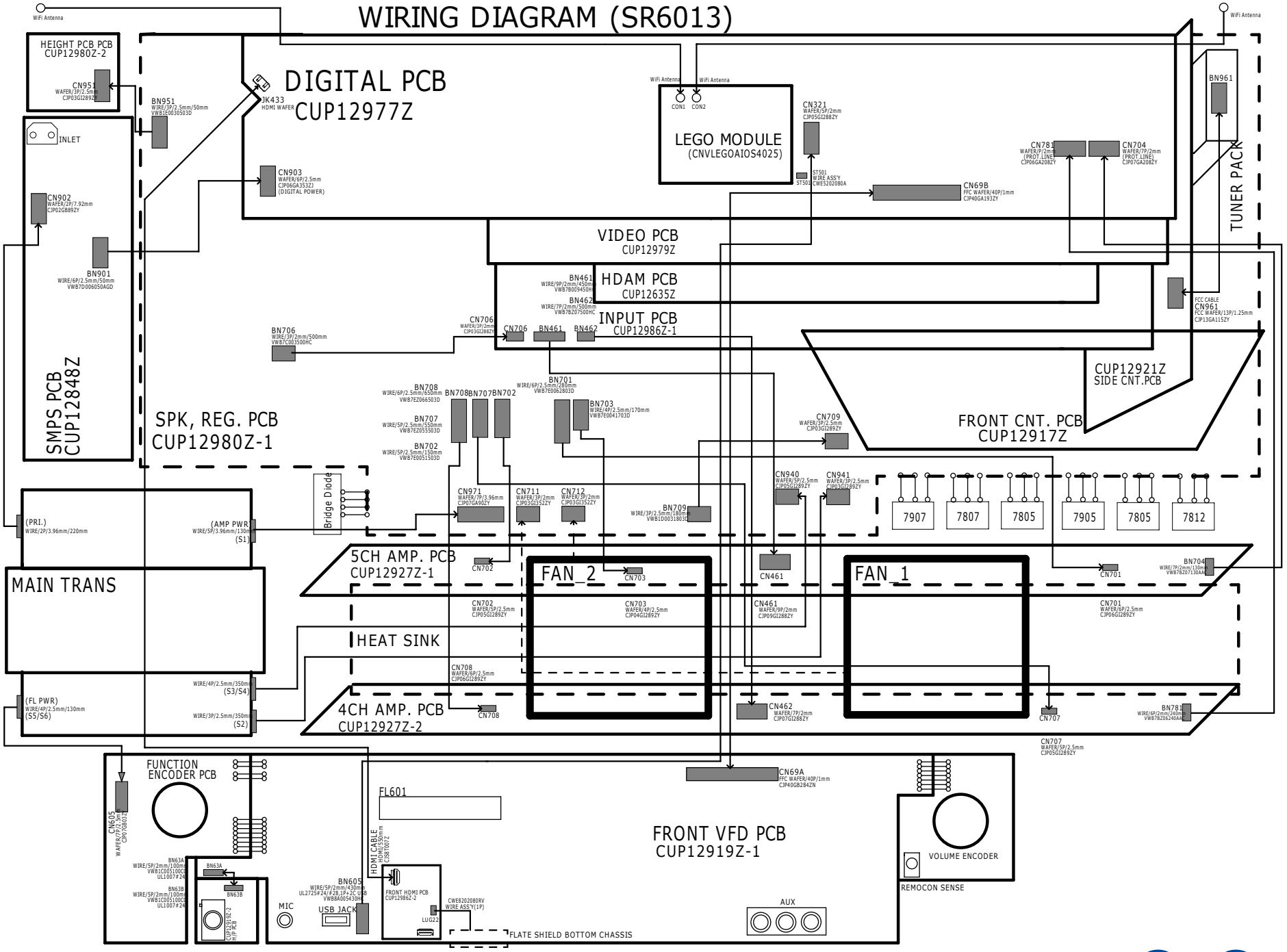

Before Servicing This Unit
Electrical
Mechanical
Repair Information
Updating

SEMICONDUCTORS

Only major semiconductors are shown, general semiconductors etc. are omitted to list.
The semiconductor which described a detailed drawing in a schematic diagram are omitted to list.

1. IC's

R5F564MJCDFC (DIGITAL : IC151)

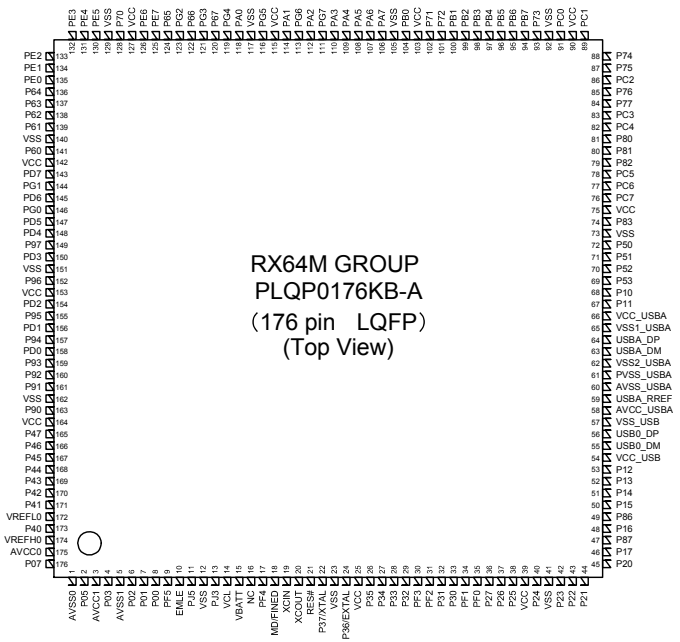

R5F56108VNFP Terminal Functions

Pin	Pin Name	Symbol	I/O	Pu/Pd	STBY	STOP	CEC STBY	Function
1	AVSS0	AVSS0	-		-	-	-	Ground pin
2	P05/IRQ13	POWER_KEY	I	M3VPu	I	I	I	Detect Power switch (Release from Wait Mode,Set to interrupt)
3	AVCC1	AVCC1	-		-	-	-	Power supply pin
4	P03/IRQ11	RED_LED	O		L/H	L	H	POWER/STANDBY LED control pin
5	AVSS1	AVSS1	-		-	-	-	Ground pin
6	P02/SCK6/IRQ10/ AN120	NC	I	M3VPu	I	I	I	NC
7	P01/RXD6/IRQ9/ AN119	RXD_MI232O	I	Pd	I	I	I	External data input port (for AMX/FW update via 232C) :Connector is FFC
8	P00/TXD6/IRQ8/ AN118	TXD_MO232I	O		L	L	L	External data output port (for AMX/FW update via 232C) :Connector is FFC
9	PF5/IRQ4	GREEN_LED	O		L	L	L	POWER LED control pin
10	EMLE	EMLE	I	Pd	-	-	-	E20 Emulator control pin (On chip Emulator is used,this pin should be High. Not used,it should be Low)
11	PJ5	VSEL_A	I		I	I	I	Master Volume (Rotary encoder) signal input pin
12	VSS	VSS	-		-	-	-	Ground pin
13	PJ3	VSEL_B	I		I	I	I	Master volume (Rotary encoder) signal input pin
14	VCL	VCL	I		-	-	-	Smoothing capacitor connection pin
15	VBATT	VBATT	-		-	-	-	Power supply pin
16	NC	NC	I	Pd	-	-	-	NC(Pull down)
17	TRST#/PF4	TRST#/ NC(NORMRAL)	I/I	Pd	I/I	I/I	I/I	E20 Emulator control pin/When normal operating mode,set to input.
18	MD/FINED	MD	I	M3VPu	I	I	I	Pins for setting the operating mode(select the Boot Mode or User Boot Mode,Single Chip Mode)
19	XCIN	XCIN	I	Pd	-	-	-	NC(Pull down)
20	XCOUT	XCOUT	I		-	-	-	NC(open)
21	RES#	RESET	I		-	-	-	Reset signal input pin
22	XTAL/P37	XTAL	I		-	-	-	Pins for a crystal resonator (Xin=12MHz × 10)
23	VSS	VSS	-		-	-	-	Ground pin
24	EXTAL/P36	EXTAL	-		-	-	-	Pins for a crystal resonator (Xin=12MHz × 10)
25	VCC	VCC	-		-	-	-	Power supply pin
26	UPSEL/P35(IN)/NMI	NC	I	SW3VPu	I	I	I	NC
27	P34/SCK6/SCK0/ IRQ4	BDOWN	I		I	I	I	Detect power down
28	P33/TIOCD0/RXD6/ RXD0/IRQ3-DS	RC_IN	I		I	I	I	Remote input
29	P32/TIOCC0/TXD6/ TXD0/IRQ2-DS	FLASHER_IN	I	Pd	I	I	I	IR Flasher control signal input (When standby mode,set to inturrupt)
30	TMS/PF3	TMS/ NC(NORMRAL)	I/I	M3VPu	-/I	-/I	I	E20 Emulator control pin/When normal operating mode,set to input.
31	TDI/PF2/RXD1	TDI/RXD_MIT-SUBISHI	I/I/I	M3VPu	-/-/I	-/-/I	I	E20 Emulator control pin/Mitsubishi writter control pin/ When normal operating mode,set to input.
32	P31/IRQ1-DS	TU_GPO2_INT	I		L	L	L	TUNER control
33	P30/RXD1	TU_SDIO	I_O		L	L	L	TUNER control
34	TCK/FINEC/PF1/ SCK1	TCK/ NC(NORMRAL)	I/I	M3VPu	-/I	-/I	I	E20 Emulator control pin//When normal operating mode,set to input.
35	TD0/TXD1/PF0	TDO/TXD_ MITSUBISHI	O/O/I	M3VPu	-/-/I	-/-/I	I	E20 Emulator control pin/Mitsubishi writter control pin/ When normal operating mode,set to input.
36	P27/SCK1	TU_SEN	O		L	L	L	TUNER control
37	P26/TXD1	TU_SCLK	O		L	L	L	TUNER control
38	P25/RXD3	VOL_DATA	O		L	L	L	Volume control pin (NJU72343)
39	VCC	VCC	-		-	-	-	Power supply pin
40	P24/SCK3	KILL_IR	O		L	L	L	Front IR disable control pin
41	VSS	VSS	-		-	-	-	Ground pin
42	P23/TXD3	E_RTS_MOEI	O	Pd (BCM58305 Internal Pd)	L	L	L	Ethernet(Network Module) control pin
43	P22/SCK0	E_CTS_MIEO	I	Pd (onboad + BCM58305 Internal Pd)	I	I	I	Ethernet(Network Module) control pin
44	P21/RXD0/IRQ9	E_RXD_MIEO	I	Pd (onboad + BCM58305 Internal Pd)	I	L	I	Ethernet(Network Module) control pin
45	P20/TXD0/IRQ8	E_TXD_MOEI	O	Pd (BCM58305 Internal Pd)	L	L	L	Ethernet(Network Module) control pin
46	P17/SCK1/TXD3/ IRQ7	NET_FACT_ RST	O(ODR)	Pu (BCM58305 Internal Pu)	Z	Z	Z	Ethernet(Network Module) control pin
47	P87/TXD10/TIOCA2	RC_OUT	O		H	L	H	Remote code (RC-5) output pin
48	P16/TXD1/RXD3/ IRQ6	NET5V_POW-ER	O		L	L	L	Ethernet power supply (Net5V) control pin
49	P86/RXD10	SEL_DATA	O		L	L	L	Audio selector control pin (NJU72750/72751)
50	P15/RXD1/SCK3/ IRQ5	AEXP_STB	O		L	L	L	Expander (MC14094) control pin
51	P14/IRQ4	AEXP_OE	O		L	L	L	Expander (MC14094) control pin
52	P13/TXD2/IRQ3	AEXP_CLK	O		L	L	L	Expander (MC14094) control pin
53	P12/RXD2/IRQ2	AEXP_DATA	O		L	L	L	Expander (MC14094) control pin
54	VCC_USB	VCC_USB	-		-	-	-	Power supply pin
55	USB0_DM	USB0_DM	-		-	-	-	NC(open)
56	USB0_DP	USB0_DP	-		-	-	-	NC(open)

Pin	Pin Name	Symbol	I/O	Pu/Pd	STBY	STOP	CEC STBY	Function
57	VSS_USB	VSS_USB	-		-	-	-	Ground pin
58	AVCC_USBA	AVCC_USBA	-		-	-	-	Power supply pin
59	USBA_PREF	USBA_PREF	-		-	-	-	NC(open)
60	AVSS_USBA	AVSS_USBA	-		-	-	-	Ground pin
61	PVSS_USBA	PVSS_USBA	-		-	-	-	Ground pin
62	VSS2_USBA	VSS2_USBA	-		-	-	-	Ground pin
63	USBA_DM	USBA_DM	-		-	-	-	NC(open)
64	USBA_DP	USBA_DP	-		-	-	-	NC(open)
65	VSS1_USBA	VSS1_USBA	-		-	-	-	Ground pin
66	VCC_USBA	VCC_USBA	-		-	-	-	Power supply pin
67	P11/SCK2/IRQ1	CEC_OUT	O		L	L	-	CEC-D control pin
68	P10/IRQ0	CEC_IN	I	CEC_ST-BY3VPu	I	I	I	CEC-D control pin
69	P53	ADV8003_ SPI_CS	O	DV3VPu	L	L	L	GUI control pin(ADV8003)
70	P52/RXD2	ADV8003_ SPI_MI	I		L	L	L	GUI control pin(ADV8003)
71	P51/SCK2	ADV8003_ SPI_CLK	O		L	L	L	GUI control pin(ADV8003)
72	P50/TXD2	ADV8003_ SPI_MO	O	DV3VPu	L	L	L	GUI control pin(ADV8003)
73	VSS	VSS	-		-	-	-	Ground pin
74	P83/SCK10	IP_RST	O	Pd	I	I	L	Scaler w/ GUI (ADV8003) Reset control pin
75	VCC	VCC	-		-	-	-	Power supply pin
76	UB/PC7/TXD8/ IRQ14	UB	I	Pd	-	-	-	Pins for setting the boot mode(select the Boot Mode or User Boot Mode)
77	PC6/RXD8/IRQ13	AVSDA	I/O	CEC3VPu	O/L	O/L	L	VIDEO I2C control pin for ADV8003/ ADV7180/ ARC IC
78	PC5/SCK8	AVSCL	I/O	CEC3VPu	O/L	O/L	L	VIDEO I2C control pin for ADV8003/ ADV7180/ ARC IC
79	P82/TXD10	DSP_MOSI	O	DA3VPu	L	L	L	DSP(CS49844A) control pin
80	P81/RXD10	DSP_MISO	I	DA3VPu	L	L	L	DSP(CS49844A) control pin
81	P80/SCK10	DSP_CLK	O	DA3VPu	L	L	L	DSP(CS49844A) control pin
82	PC4/SCK5	DSP_CS	O	DA3VPu	L	L	L	DSP(CS49844A) control pin
83	PC3/TXD5	DSP_FLAG0	I	DA3VPu	L	L	L	DSP(CS49844A) interrupt signal input pin
84	P77/TXD11	DSP_RST	O	Pd	L	L	L	DSP(CS49844A) reset control pin
85	P76/RXD11	DSP_BUSY	I	DA3VPu	L	L	L	DSP BUSY signal input
86	PC2/RXD5	NC	O		L	L	L	NC
87	P75/SCK11	CEC_POWER2	O		L	L	H	CEC standby power control (for CEC Standby Mode 3)
88	P74	DSP_ROM_ WRITE	O	-	L	L	L	DSP ROM writing control(When writing,set to High)
89	PC1/SCK5/IRQ12	DAC.PLD_ERR	I		L	L	L	Detect PLD error (from Audio PLD)
90	VCC	VCC	-		-	-	-	Power supply pin
91	PC0/IRQ14	NC	O	-	L	L	L	NC
92	VSS	VSS	-		-	-	-	Ground pin
93	P73	NC	O	-	L	L	L	NC
94	PB7/TXD9	HSDA	I/O	CEC3VPu	L	L	L	HDMI I2C control pin for MN864787/MN864788
95	PB6/RXD9	HSCL	I/O	CEC3VPu	L	L	L	HDMI I2C control pin for MN864787/MN864788
96	PB5/SCK9	THERMAL_F	I	SW3VPu	I	L	I	Protection detect signal input pin (for Heat sink)
97	PB4	APLD_CS	O		L	L	L	Audio PLD (5M570ZF256C5N) control pin
98	PB3/SCK4/SCK6	APLD_DATA/ DAC_DATA	O		L	L	L	Audio PLD (5M570ZF256C5N) control pin/DAC (AK4458VN) control pin
99	PB2	APLD_CLK/ DAC_CLK	O		L	L	L	Audio PLD (5M570ZF256C5N) control pin/DAC (AK4458VN) control pin
100	PB1/TXD4/TXD6/ IRQ4-DS	DAC_MS	O		L	L	L	DAC (AK4458VN) control pin
101	P72	DAC_RST	O		L	L	L	DAC (AK4458VN) control pin
102	P71	Z2PLD_ERR	I	-	L	L	L	Detect PLD error (from Audio PLD)
103	VCC	VCC	-		-	-	-	Power supply pin
104	PB0/RXD4/RXD6/ IRQ12	NC	O	-	L	L	L	NC
105	VSS	VSS	-		-	-	-	Ground pin

Pin	Pin Name	Symbol	I/O	Pu/Pd	STBY	STOP	CEC STBY	Function
106	PA7	ISEL_A	I		I	I	I	Input selector (Rotary encoder) signal input pin
107	PA6	ISEL_B	I		I	I	I	Input selector (Rotary encoder) signal input pin
108	PA5	VOL_CLK	O		L	L	L	Volume control pin (NJU72343)
109	PA4/TXD5/SSDA5/ IRQ5-DS	COMP_DET	I	SW3VPu	I	I	I	Component video signal detect pin
110	PA3/RXD5/SSCL5	MVOL_MUTE	O		L	L	L	Volume control pin (NJU72343)
111	TRDATA3/PG7	REMOTE_ POWER(232C)	O		L	L	L	232C power supply (REMOTE 3.3V) control pin
112	PA2/RXD5	DA_POWER2	O		L	L	L	Digital audio power supply (DA1.0V) control pin
113	TRDATA2/PG6	ZVOL_DATA	O		L	L	L	ZONE2 volume control pin (NJW1194)
114	PA1/SCK5/IRQ11	ZVOL_CLK	O		L	L	L	ZONE2 volume control pin (NJW1194)
115	VCC	VCC	-		-	-	-	Power supply pin
116	TRCLK/PG5	ZVOL_STB	O		L	L	L	ZONE2 volume control pin (NJW1194)
117	VSS	VSS	-		-	-	-	Ground pin
118	PA0	H5V_DET	I	-	I	I	I	HDMI IN 5V detect signal pin
119	TRSYNC/PG4	FL_RST	O		L	L	L	FL display control pin
120	P67/IRQ15	FL_CE	O		L	L	L	FL display control pin
121	TRDATA1/PG3	FL_CLK	O		L	L	L	FL display control pin
122	P66	FL_DATA	O		L	L	L	FL display control pin
123	TRDATA0/PG2	NC	O		L	L	L	NC
124	P65	FIL_CTRL	O		L	L	L	Filament Power control pin (for Portal FLD)
125	PE7/IRQ7/AN105	ASO/DC_DET	I		I	I	I	Protection detect signal input pin (for ASO and DC) (A/D converter)
126	PE6/IRQ6/AN104	MIC_DET/_H/ P_DET	I		I	I	I	Headphone insert detect pin/Microphone insert detect pin (A/D converter)
127	VCC	VCC	-		-	-	-	Power supply pin
128	P70	ADC_RST	O		I	L	I	A/D convertor(AK5358) reset control pin
129	VSS	VSS	-		-	-	-	Ground pin
130	PE5/IRQ5/AN103	MAIN_POWER	O		L	L	L	Power supply control pin
131	PE4/AN102	CPU_POWER	O		L	L	L	CPU power supply control pin
132	PE3/AN101	AIOS4_WAKE-UP	O		L	L	L	same as NET5V_POWER,NET3.3V_POWER (This port use to control for Network Module standby mode in the future(Low：Deep Standby, High：normal))
133	PE2/RXD12/IRQ7-DS/AN100	AIOS4_STBY_ STATUS	I	-	I	I	I	Not used (This port use to detect for Network Module standby status in the future (Low：normal, High：Deep Standby))
134	PE1/TXD12	GUI_WRITE	O		L	L	L	GUI flash rom writing control
135	PE0/SCK12	NET3.3V_ POWER	O		L	L	L	Ethernet power supply control(Net3.3V)
136	P64	D5V_POWER	O		L	L	H	Digital 5V power supply control pin(3.3V and 1.8V generate from 5V)(When CEC standby mode3,set to Low)
137	P63	CEC_POWER	O		L	L	H	CEC standby power supply control(CEC5V,CEC3.3V,CEC1.8V)(When CEC standby mode3,set to Low)
138	P62	DV_POWER1	O		L	L	L	Digital video power supply (DV5V,DV3.3V) control pin
139	P61	DV_POWER2	O		L	L	L	Digital video power supply (DV1.8V) control pin
140	VSS	VSS	-		-	-	-	Ground pin
141	P60	DIR_DIN	O		L	L	L	DIR (PCM9211) control pin
142	VCC	VCC	-		-	-	-	Power supply pin
143	PD7/IRQ7/AN107	DIR_CE	O		L	L	L	DIR (PCM9211) control pin
144	PG1	DIR_DOUT	I	DA3.3Pu	I	I	I	DIR (PCM9211) control pin
145	PD6/IRQ6/AN106	DIR_CLK	O		L	L	L	DIR (PCM9211) control pin
146	PG0	DIR_RST	O		L	L	L	DIR (PCM9211) control pin
147	PD5/IRQ5/AN113	787_HAINT	I	CEC3VPu	Z		-	HDMI Rx (MN864787) audio interrupt signal det
148	PD4/IRQ4/AN112	NC	O	DA3VPu	L	L	L	NC
149	P97	DE_RST	O	Pd	Z		L	Video decoder (ADV7180) reset control pin
150	PD3/IRQ3/AN111	787_HINT	I	CEC3VPu	Z		-	HDMI Tx (MN864787) interrupt signal input pin
151	VSS	VSS	-		-	-	-	Ground pin
152	P96	787_RST	O	Pd	Z		H	HDMI Tx (MN864787) reset control pin (When CEC standby mode3,set to reset)

Pin	Pin Name	Symbol	I/O	Pu/Pd	STBY	STOP	CEC STBY	Function
153	VCC	VCC	-		-	-	-	Power supply pin
154	PD2/IRQ2/AN110	788_2_HINT	I	CEC3VPu	Z		-	HDMI Rx (MN864788) interrupt signal input pin
155	P95	788_2_RST	O	Pd	Z		H	HDMI Rx (MN864788) reset control pin (When CEC standby mode3,set to reset)
156	PD1/IRQ1/AN109	788_1_HINT	I	CEC3VPu	Z		-	HDMI Rx (MN864788) interrupt signal input pin
157	P94	788_1_RST	O	Pd	Z		H	HDMI Rx (MN864788) reset control pin (When CEC standby mode3,set to reset)
158	PD0/IRQ0/AN108	ARC_RST	O	Pd	L	L	L	Reset control pin for ARC IC
159	P93/AN117	THERMAL_A	I	SW3VPu	I	L	I	Protection detect signal input pin (for power TR)
160	P92/RXD7/AN116	DA_POWER1	O		L	L	L	Digital audio power supply (DA3.3V,DA1.2V) control pin
161	P91/AN115	THERMAL_E	I/I	SW3VPu	I/I	L	I/I	Protection detect signal input pin (for Heat sink)
162	VSS	VSS	-		-	-	-	Ground pin
163	P90/TXD7/AN114	TEMP_SEN-SOR	I		I	L	I	Temperature sensor input pin (for SRM)
164	VCC	VCC	-		-	-	-	Power supply pin
165	P47/IRQ15-DS/ AN007	ARC_INT	I	IOVc-c3VPu	L	L	L	ARC IC interrupt signal input pin
166	P46/IRQ14-DS/ AN006	CURRENT_DET	I/O		I/L	L/L	I/L	Current level monitor pin (A/D converter)
167	P45/IRQ13-DS/ AN005	AMPSIGDET	I		I	L	I	Signal level monitor pin (AD converter)
168	P44/IRQ12-DS/ AN004	MODE	I		I	I	I	Region setting pin
169	P43/IRQ11-DS/ AN003	KEY3	I	M3VPu	I	I	I	Key control signalinput pin (When standby mode,set to inturrupt)
170	P42/IRQ10-DS/ AN002	KEY2	I	M3VPu	I	I	I	Key control signalinput pin (When standby mode,set to inturrupt)
171	P41/IRQ9-DS/ AN001	KEY1	I	M3VPu	I	I	I	Key control signalinput pin (When standby mode,set to inturrupt)
172	VREFL0	VREFL0	-		-	-	-	Ground pin
173	P40	SEL_CLK	O		L	L	L	Audio selector control pin (NJU72750/72751)
174	VREFH0	VREFH0	-		-	-	-	Power supply pin
175	AVCC0	AVCC0	-		-	-	-	Power supply pin
176	P07/IRQ15	NC	O	-	L	L	L	NC

PCM9211 (DIGITAL : IC202)

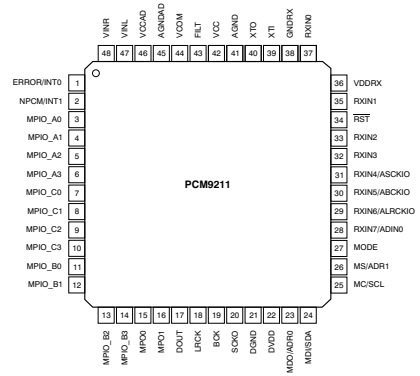

PIN Functions

PIN				DESCRIPTION
NO.	NAME	I/O	5-V TOLERANT	
1	ERROR/INT0	O	No	DIR Error detection output / Interrupt0 output
2	NPCM/INT1	O	No	DIR Non-PCM detection output / Interrupt1 output
3	MPIO_A0	I/O	Yes	Multipurpose I/O, Group A(1)
4	MPIO_A1	I/O	Yes	Multipurpose I/O, Group A(1)
5	MPIO_A2	I/O	Yes	Multipurpose I/O, Group A(1)
6	MPIO_A3	I/O	Yes	Multipurpose I/O, Group A(1)
7	MPIO_C0	I/O	Yes	Multipurpose I/O, Group C(1)
8	MPIO_C1	I/O	Yes	Multipurpose I/O, Group C(1)
9	MPIO_C2	I/O	Yes	Multipurpose I/O, Group C(1)
10	MPIO_C3	I/O	Yes	Multipurpose I/O, Group C(1)
11	MPIO_B0	I/O	Yes	Multipurpose I/O, Group B(1)
12	MPIO_B1	I/O	Yes	Multipurpose I/O, Group B(1)
13	MPIO_B2	I/O	Yes	Multipurpose I/O, Group B(1)
14	MPIO_B3	I/O	Yes	Multipurpose I/O, Group B(1)
15	MPO0	O	No	Multipurpose output 0
16	MPO1	O	No	Multipurpose output 1
17	DOUT	O	No	Main output port, serial digital audio data output
18	LRCK	O	No	Main output port, LR clock output
19	BCK	O	No	Main output port, Bit clock output
20	SCKO	O	No	Main output port, System clock output
21	DGND	–	–	Ground, for digital
22	DVDD	–	–	Power supply, 3.3 V (typ.), for digital
23	MDO/ADR0	I/O	Yes	Software control I/F, SPI data output / I2C slave address setting0(2)
24	MDI/SDA	I/O	Yes	Software control I/F, SPI data input / I2C data input/output(2) (3)
25	MC/SCL	I	Yes	Software control I/F, SPI clock input / I2C clock input(2)
26	MS/ADR1	I	Yes	Software control I/F, SPI chip select / I2C slave address setting1(2)
27	MODE	I	No	Control mode setting, (see the Serial Control Mode section, Control Mode Pin Setting)
28	RXIN7/ADIN0	I	Yes	Biphase signal, input 7 / AUXIN0, serial audio data input(2)
29	RXIN6/ALRCKI0	I	Yes	Biphase signal, input 6 / AUXIN0, LR clock input(2)
30	RXIN5/ABCKI0	I	Yes	Biphase signal, input 5 / AUXIN0, bit clock input(2)
31	RXIN4/ASCKI0	I	Yes	Biphase signal, input 4 / AUXIN0, system clock input(2)
32	RXIN3	I	Yes	Biphase signal, input 3(2)
33	RXIN2	I	Yes	Biphase signal, input 2(2)
34	RST	I	Yes	Reset Input, active low(2) (4)
35	RXIN1	I	Yes	Biphase signal, input 1, built-in coaxial amplifier
36	VDDRX	–	–	Power supply, 3.3 V (typ.), for RXIN0 and RXIN1.
37	RXIN0	I	Yes	Biphase signal, input 0, built-in coaxial amplifier
38	GNDRX	-	-	Ground, for RXIN
39	XTI	I	No	Oscillation circuit input for crystal resonator or external XTI clock source input(5)
40	XTO	O	No	Oscillation circuit output for crystal resonator
41	AGND	–	–	Ground, for PLL analog
42	VCC	–	–	Power supply, 3.3 V (typ.), for PLL analog
43	FILT	O	No	External PLL loop filter connection terminal; must connect recommended filter
44	VCOM	O	No	ADC common voltage output; must connect external decoupling capacitor
45	AGNDAD	–	–	Ground, for ADC analog
46	VCCAD	–	–	Power supply, 5.0 V (typ.), for ADC analog
47	VINL	I	No	ADC analog voltage input, left channel
48	VINR	I	No	ADC analog voltage input, right channel

(1) Schmitt trigger input
(2) Schmitt trigger input
(3) Open-drain configuration in I2C mode
(4) Onboard pull-down resistor (50 k Ω , typical)
(5) CMOS Schmitt trigger input

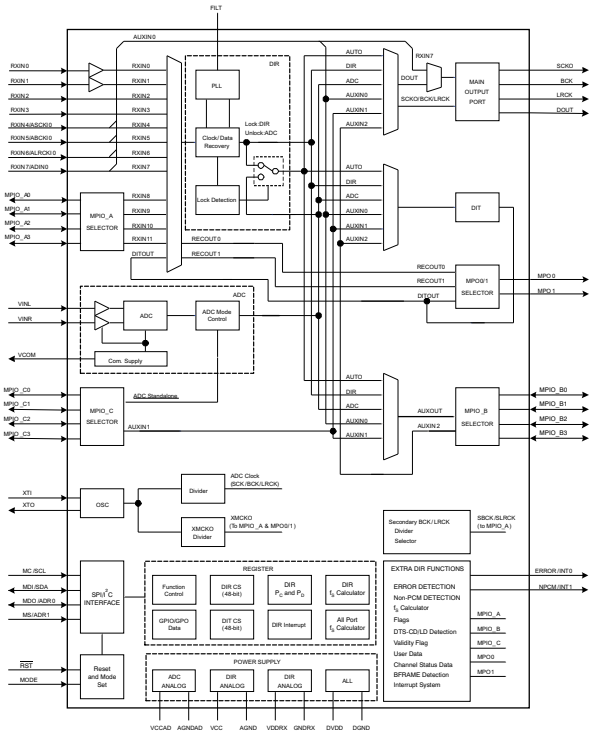
FILT
AUXIN0
RXIN0
RXIN1
RXIN2
RXIN3
RXIN4/ASCK0
RXIN5/ABCK0
RXIN6/ALRCK0
RXIN7/ADIN0
MPIO_A0
MPIO_A1
MPIO_A2
MPIO_A3
MPIO_A SELECTOR
RXIN8
RXIN9
RXIN10
RXIN11
DITOUT
DIR
PLL
Clock/ Data Recovery
Lock:DIR Unlock:ADC
Lock Detection
RECOUT 0
RECOUT 1
AUTO
DIR
ADC
AUXIN0
AUXIN1
AUXIN2
DOUT
RXIN7
MAIN OUTPUT PORT
SCKO/BCK/LRCK
SCKO
BCK
LRCK
DOUT
DIT
RECOUT0
RECOUT1
DITOUT
MPO0/1 SELECTOR
MPO:0
MPO:1
VINL
VINR
ADC
ADC Mode Control
VCOM
Com. Supply
MPIO_C0
MPIO_C1
MPIO_C2
MPIO_C3
MPIO_C SELECTOR
ADC Standalone
AUXIN1
AUXOUT
AUXIN 2
MPIO_B SELECTOR
MPIO_B0
MPIO_B1
MPIO_B2
MPIO_B3
XTI
XTO
OSC
Divider
ADC Clock (BCK/BCK/LRCK)
XMCKO Divider
XMCKO (To MPIO_A & MPO0/1)
Secondary BCK/LRCK Divider Selector
SBCK/SLRCK (to MPIO_A)
MC /SCL
MDI /SDA
MDO /ADR:0
MS/ADR:1
SPI/I2C INTERFACE
RST
MODE
Reset and Mode Set
REGISTER
Function Control
DIR CS (48-bit)
DIR Pc and Pb
DIR fs Calculator
GPIO/GPO Data
DIT CS (48-bit)
DIR Interrupt
All Port fs Calculator
POWER SUPPLY
ADC ANALOG
DIR ANALOG
DIR ANALOG
ALL
EXTRA DIR FUNCTIONS
ERROR DETECTION
Non-PCM DETECTION
fs Calculator
Flags
DTS-CD/LD Detection
Validity Flag
User Data
Channel Status Data
BFRAME Detection
Interrupt System
MPIO_A
MPIO_B
MPIO_C
MPO0
MPO1
ERROR:/INT0
NPCM:/INT1
VCCAD
AGNDAD
VCC
AGND
VDDRX
GNDRX
DVDD
DGND

CS49844A (DIGITAL : IC251)

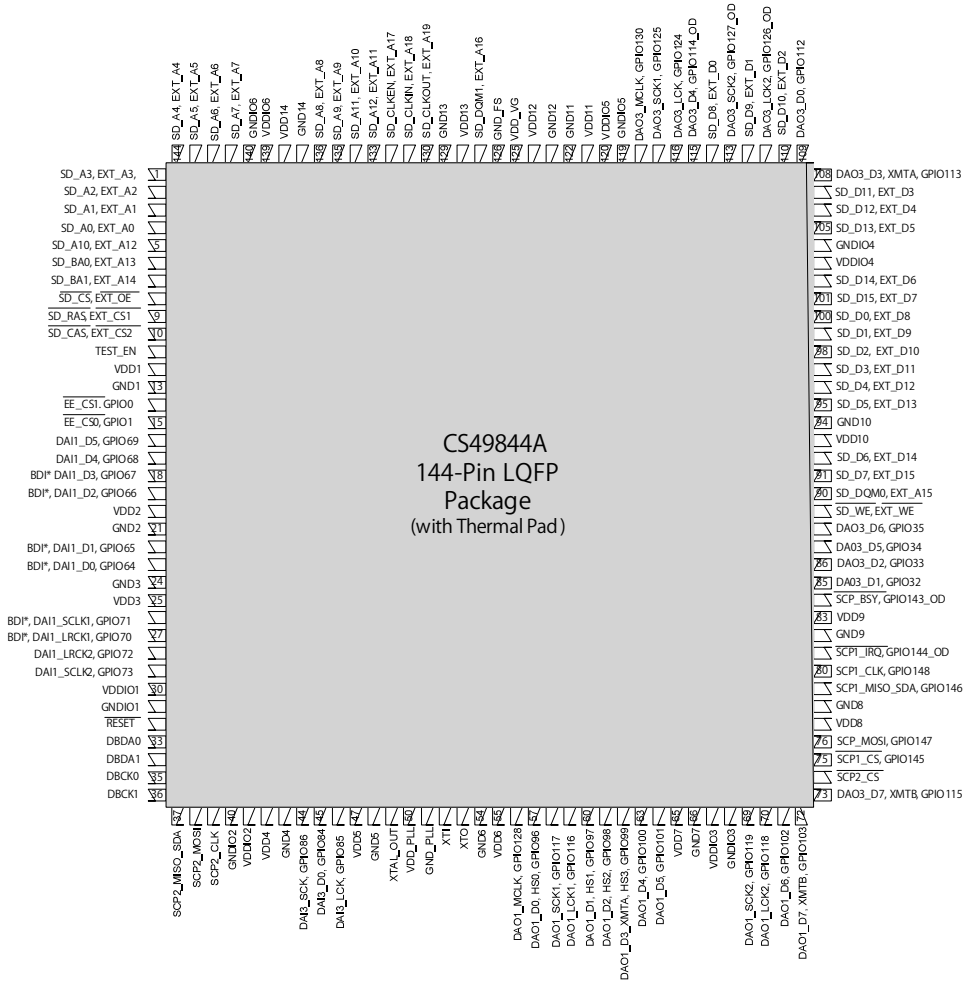

M12L64164A-5TG2Y (DIGITAL : IC252)

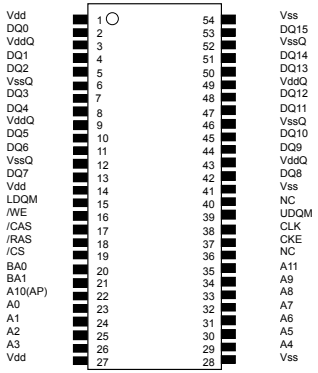

CLK	: Master Clock	U,LDQM	: Output Disable / Write Mask
CKE	: Clock Enable	A0-11	: Address Input
/CS	: Chip Select	BA0,1	: Bank Address
/RAS	: Row Address Strobe	Vdd	: Power Supply
/CAS	: Column Address Strobe	VddQ	: Power Supply for Output
/WE	: Write Enable	Vss	: Ground
DQ0-15	: Data I/O	VssQ	: Ground for Output

Block diagram

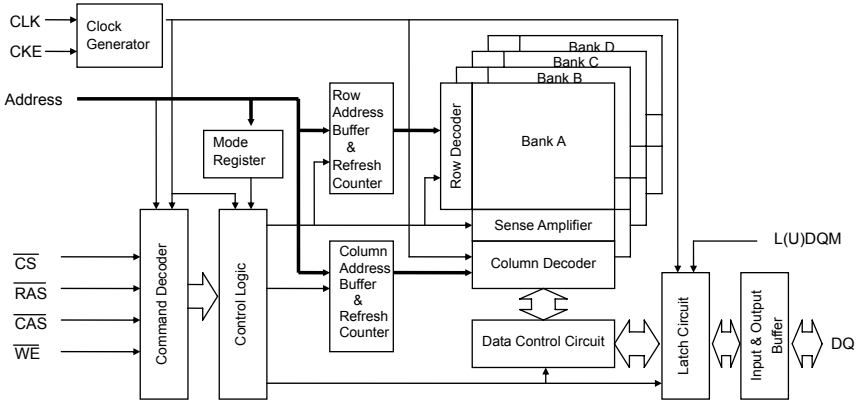

AK4458VN (FRONT CNT : IC301, IC311)

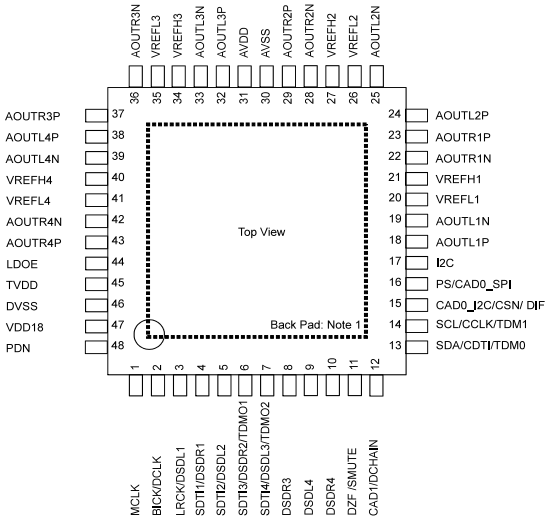

Pin Function

No.	Pin Name	I/O	Function	PD State
1	MCLK	I	External Master Clock Input Pin	Hi-Z
2	BICK	I	Audio Serial Data Clock Pin in PCM mode	Hi-z
	DCLK	I	DSD Clock Pin in DSD mode	
3	LRCK	I	Input Channel Clock Pin in PCM mode	Hi-Z
	DSDL1	I	Audio Serial Data Input in DSD mode	
4	SDTI1	I	Audio Serial Data Input in PCM mode	Hi-Z
	DSDR1	I	Audio Serial Data Input in DSD mode	
5	SDTI2	I	Audio Serial Data Input in PCM mode	Hi-Z
	DSDL2	I	Audio Serial Data Input in DSD mode	
6	SDTI3	I	Audio Serial Data Input in PCM mode	100k Ω Pull down
	DSDR2	I	Audio Serial Data Input in DSD mode	
	TDMO1	O	Audio Serial Data Output in Daisy Chain mode	
7	SDTI4	I	Audio Serial Data Input in PCM mode	100k Ω Pull down
	DSDL3	I	Audio Serial Data Input in DSD mode	
	TDMO2	O	Audio Serial Data Output in Daisy Chain mode	
8	DSDR3	I	Audio Serial Data Input in DSD mode	Hi-Z
9	DSDL4	I	Audio Serial Data Input in DSD mode	Hi-Z
10	DSDR4	I	Audio Serial Data Input in DSD mode	Hi-Z
11	DZF	O	Zero Input Detect in I2C Bus or 3-wire serial control mode	100k Ω Pull down
	SMUTE	I	Soft Mute Pin in Parallel control mode. When this pin is changed to "H", soft mute cycle is initiated. When it is returning to "L", the output mute is released.	
12	CAD1	I	Chip Address 0 Pin in I C Bus or 3-wire serial control mode	Hi-Z
	DCHAIN	I	Daisy Chain Mode select pin in Parallel control mode.	
13	SDA	I/O	Control Data Pin in I2C Bus serial control mode	Hi-Z
	CDTI	I	Control Data Input Pin in 3-wire serial control mode	
	TDM0	I	TDM Mode select pin in Parallel control mode.	
14	SCL	I	Control Data Clock Pin in I2C Bus serial control mode	Hi-Z
	CCLK	I	Control Data Clock Pin in 3-wire serial control mode	
	TDM1	I	TDM Mode select pin in Parallel control mode.	
15	CAD0_I2C	I	Chip Address 0 Pin in I2C Bus serial control mode	Hi-Z
	CSN	I	Chip Select Pin in 3-wire serial control mode	
	DIF	I	Audio Data Format Select in Parallel control mode. "L": 32-bit MSB, "H": 32-bit I2S	
16	PS	I	(I2C pin = "H") Control Mode Select Pin "L": I2C Bus serial control mode, "H": Parallel control mode.	Hi-Z
	CAD0_SPI	I	(I2C pin = "L") Chip Address 0 Pin in 3-wire serial control mode	
17	I2C	I	Control Mode Select Pin "L": 3-wire serial control mode "H": I2C Bus serial control mode or Parallel control mode.	Hi-Z
18	AOUTL1P	O	Lch Positive Analog Output 1 Pin	Hi-Z
19	AOUTL1N	O	Lch Negative Analog Output 1 Pin	Hi-Z
20	VREFL1	I	Negative Voltage Reference Input Pin, AVSS	Hi-Z
21	VREFH1	I	Positive Voltage Reference Input Pin, AVDD	Hi-Z
22	AOUTR1N	O	Rch Negative Analog Output 1 Pin	Hi-Z
23	AOUTR1P	O	Rch Positive Analog Output 1 Pin	Hi-Z
24	AOUTL2P	O	Lch Positive Analog Output 2 Pin	Hi-Z
25	AOUTL2N	O	Lch Negative Analog Output 2 Pin	Hi-Z
26	VREFL2	I	Negative Voltage Reference Input Pin, AVSS	Hi-Z
27	VREFH2	I	Positive Voltage Reference Input Pin, AVDD	Hi-Z
28	AOUTR2N	O	Rch Negative Analog Output 2 Pin	Hi-Z
29	AOUTR2P	O	Rch Positive Analog Output 2 Pin	Hi-Z
30	AVSS	-	Analog Ground Pin	—
31	AVDD	-	Analog Power Supply Pin, 3.0V-5.5V	—
32	AOUTL3P	O	Lch Positive Analog Output 3 Pin	Hi-Z
33	AOUTL3N	O	Lch Negative Analog Output 3 Pin	Hi-Z
34	VREFH3	I	Positive Voltage Reference Input Pin, AVDD	Hi-Z
35	VREFL3	I	Negative Voltage Reference Input Pin, AVSS	Hi-Z
36	AOUTR3N	O	Rch Negative Analog Output 3 Pin	Hi-Z
37	AOUTR3P	O	Rch Positive Analog Output 3Pin	Hi-Z
38	AOUTL4P	O	Lch Positive Analog Output 4 Pin	Hi-Z
39	AOUTL4N	O	Lch Negative Analog Output 4 Pin	Hi-Z
40	VREFH4	I	Positive Voltage Reference Input Pin, AVDD	Hi-Z
41	VREFL4	I	Negative Voltage Reference Input Pin, AVSS	Hi-Z
42	AOUTR4N	O	Rch Negative Analog Output 4 Pin	Hi-Z
43	AOUTR4P	O	Rch Positive Analog Output 4 Pin	Hi-Z
44	LDOE	I	Internal LDO Enable Pin. "L": Disable, "H": Enable	Hi-Z
45	TVDD	-	Digital Power Supply Pin, 3.0V-3.6V	—
46	DVSS	-	Digital Ground Pin	—
47	VDD18	O	LDO Output Pin (LDOE pin = "H") This pin should be connected to DVSS with 1.0µF.	(Note 4)
		I	1.8V Power Input Pin (LDOE pin = "L")	
48	PDN	I	Power-Down & Reset Pin When this pin is "L", the AK4458 is powered-down and the control registers are reset to default state.	Hi-Z

Note 2. All input pins except internal pull-up/down pins should not be left floating.
Note 3. PCM mode and DSD mode are controlled by registers. Daisy Chain mode is controlled by both registers and pins.
Note 4. This pin outputs DVSS when the LDOE pin = "H" and Hi-z when the LDOE pin = "L".

FUNCTIONAL BLOCK DIAGRAM

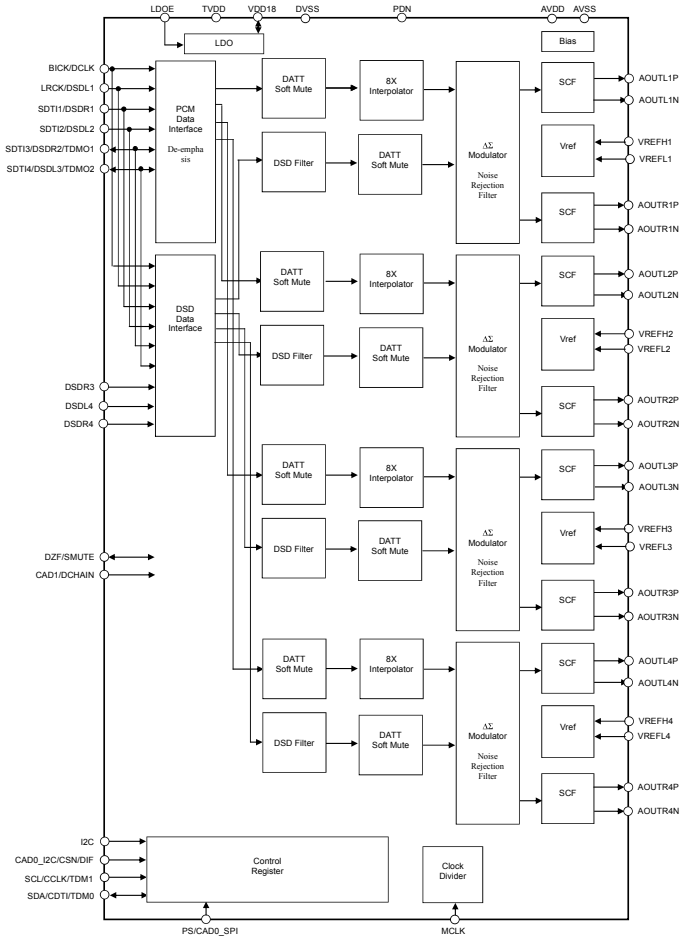

PCM5100 (DIGITAL : IC321, IC323)

PCM510X (top view)

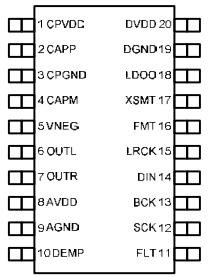

Table 2. TERMINAL FUNCTIONS, PCM510x

TERMINAL NAME	TERMINAL NO.	I/O	DESCRIPTION
CPVDD	1	-	Charge pump power supply, 3.3V
CAPP	2	O	Charge pump flying capacitor terminal for positive rail
CPGND	3	-	Charge pump ground
CAPM	4	O	Charge pump flying capacitor terminal for negative rail
VNEG	5	O	Negative charge pump rail terminal for decoupling, -3.3V
OUTL	6	O	Analog output from DAC left channel
OUTR	7	O	Analog output from DAC right channel
AVDD	8	-	Analog power supply, 3.3V
AGND	9	-	Analog ground
DEMP	10	I	De-emphasis control for 44.1kHz sampling rate(1): Off (Low) / On (High)
FLT	11	I	Filter select : Normal latency (Low) / Low latency (High)
SCK	12	I	System clock input
BCK	13	I	Audio data bit clock input
DIN	14	I	Audio data input
LRCK	15	I	Audio data word clock input
FMT	16	I	Audio format selection : I^2S (Low) / Left justified (High)
XSMT	17	I	Soft mute control : Soft mute (Low) / soft un-mute (High)
LDOO	18	-	Internal logic supply rail terminal for decoupling
DGND	19	-	Digital ground
DVDD	20	-	Digital power supply, 3.3V

PCM5100 Block Diagram

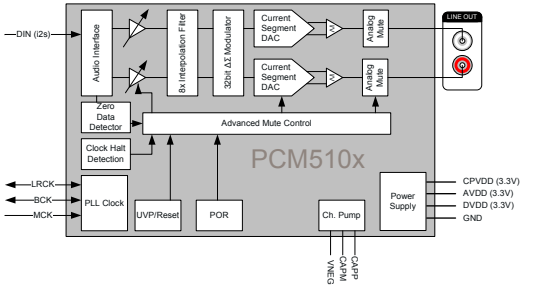

Figure 1. PCM510x Functional Block Diagram

NJU72343 (INPUT : IC471, IC491)

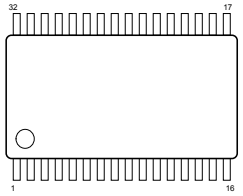

No.	Symbol	Function	No.	Symbol	Function
1	AREF	Analog reference potential	17	DATA	IC control data input
2	ADR	Address selection	18	CLOCK	IC control clock input
3	InA2	Ach input2	19	VDDOUT	Digital power supply output
4	InB2	Bch input2	20	AREF	Analog reference potential
5	InA1	Ach input1	21	OutH	Hch output
6	InB1	Bch input1	22	OutG	Gch output
7	InC	Cch input	23	OutF	Fch output
8	InD	Dch input	24	OutE	Ech output
9	InE	Ech input	25	OutD	Dch output
10	InF	Fch input	26	OutC	Cch output
11	InG1	Gch input1	27	OutB	Bch output
12	InH1	Hch input1	28	OutA	Ach output
13	InG2	Cch input2	29	AREF	Analog reference potential
14	InH2	Dch input2	30	V-	Power supply(-)
15	MUTE	External mute control	31	AREF	Analog reference potential
16	REF	Digital reference potential	32	V+	Power supply(+)

NJU72750 (INPUT : IC473, IC474, IC475, IC478)

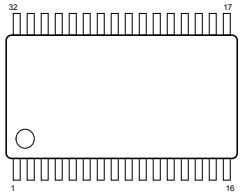

No.	Symbol	Function	No.	Symbol	Function
1	V+	Power supply(+)	17	DATA	IC control data input
2	InA1	Ach input1	18	CLOCK	IC control clock input
3	InB1	Bch input1	19	NC	-
4	InA2	Ach input2	20	NC	-
5	InB2	Bch input2	21	OutB3	Bch output3
6	InA3	Ach input3	22	OutA3	Ach output3
7	InB3	Bch input3	23	REF_B	Bch reference potential
8	InA4	Ach input4	24	OutB2	Bch output2
9	InB4	Bch input4	25	OutA2	Ach output2
10	InA5	Ach input5	26	REF_A	Ach reference potential
11	InB5	Bch input5	27	OutB1	Bch output1
12	InA6	Ach input6	28	OutA1	Ach output1
13	InB6	Bch input6	29	NC	-
14	InA7	Ach input7	30	ADR0	Address selection pin 0
15	InB7	Bch input7	31	ADR1	Address selection pin 1
16	REF	BIAS reference potential	32	V-	Power supply(-)

NJM2595MTE1 (VIDEO : IC511)

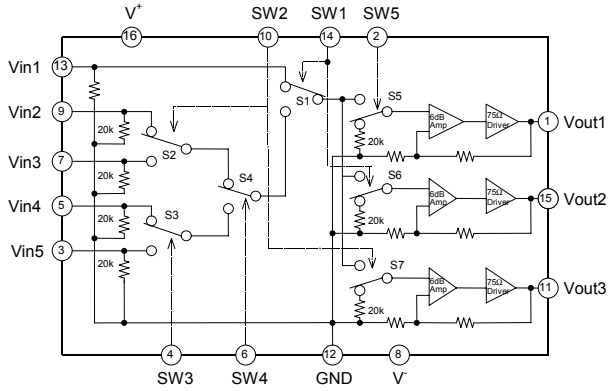

NJM2586AVC3(VIDEO : IC516)

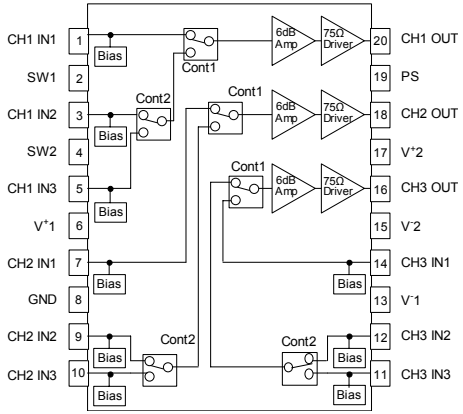

SSOP20-C3

2. FL DISPLAY

FLD (GP1261AI) (FRONT : FL601)

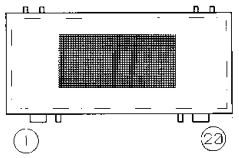

PIN CONNECTION

PIN NO.	1	2	3	4	5	6	7	8	9	10	11	12	13	14	15	16	17	18	19	20
CONNECTION	F-	NP	NC	NC	NC	NC	TEST	INT	RESET	DIO	CLK	CS	OSC	NC	VH	PGND	LGND	VDD	NP	F+

NOTE

1) F-, F+ ----Filament
2) NP ------No pin
3) DL ------Datum Line
4) VDD ------Logic Voltage Supply pin
5) LGND ----Logic GND pin
6) PGND ----Power GND pin
7) VH ------High Voltage Supply pin
8) $\overline{OSC}$ ----Pin for self-oscillation
9) $\overline{CS}$ ------Chip Select Input pin
10) CLK ----Shift Register Clock
11) DA ----Serial Data Input
12) $\overline{RESET}$ --Reset Input
13) INT ------Int pin
14) TSA, B --Test pin
15) Solder composition is Sn-3Ag-0.5Cu.
16) NC ------No connection
(NC pin shold be electrically open on the PC boaed)

PATTERN DETAIL

T1		T2			T3			-	-	-	T15			T16			T17
1-1	2-1	3-1	4-1	5-1	6-1	7-1	8-1	-	-	-	42-1	43-1	44-1	45-1	46-1	47-1	48-1
1-2	2-2	3-2	4-2	5-2	6-2	7-2	8-2	-	-	-	42-2	43-2	44-2	45-2	46-2	47-2	48-2
1-3	2-3	3-3	4-3	5-3	6-3	7-3	8-3	-	-	-	42-3	43-3	44-3	45-3	46-3	47-3	48-3
1-4	2-4	3-4	4-4	5-4	6-4	7-4	8-4	-	-	-	42-4	43-4	44-4	45-4	46-4	47-4	48-4
1-5	2-5	3-5	4-5	5-5	6-5	7-5	8-5	-	-	-	42-5	43-5	44-5	45-5	46-5	47-5	48-5
1-6	2-6	3-6	4-6	5-6	6-6	7-6	8-6	-	-	-	42-6	43-6	44-6	45-6	46-6	47-6	48-6
1-7	2-7	3-7	4-7	5-7	6-7	7-7	8-7	-	-	-	42-7	43-7	44-7	45-7	46-7	47-7	48-7
1-8	2-8	3-8	4-8	5-8	6-8	7-8	8-8	-	-	-	42-8	43-8	44-8	45-8	46-8	47-8	48-8
1-9	2-9	3-9	4-9	5-9	6-9	7-9	8-9	-	-	-	42-9	43-9	44-9	45-9	46-9	47-9	48-9
1-10	2-10	3-10	4-10	5-10	6-10	7-10	8-10	-	-	-	42-10	43-10	44-10	45-10	46-10	47-10	48-10
1-11	2-11	3-11	4-11	5-11	6-11	7-11	8-11	-	-	-	42-11	43-11	44-11	45-11	46-11	47-11	48-11
1-12	2-12	3-12	4-12	5-12	6-12	7-12	8-12	-	-	-	42-12	43-12	44-12	45-12	46-12	47-12	48-12
1-13	2-13	3-13	4-13	5-13	6-13	7-13	8-13	-	-	-	42-13	43-13	44-13	45-13	46-13	47-13	48-13
1-14	2-14	3-14	4-14	5-14	6-14	7-14	8-14	-	-	-	42-14	43-14	44-14	45-14	46-14	47-14	48-14
1-15	2-15	3-15	4-15	5-15	6-15	7-15	8-15	-	-	-	42-15	43-15	44-15	45-15	46-15	47-15	48-15
1-16	2-16	3-16	4-16	5-16	6-16	7-16	8-16	-	-	-	42-16	43-16	44-16	45-16	46-16	47-16	48-16
1-17	2-17	3-17	4-17	5-17	6-17	7-17	8-17	-	-	-	42-17	43-17	44-17	45-17	46-17	47-17	48-17
1-18	2-18	3-18	4-18	5-18	6-18	7-18	8-18	-	-	-	42-18	43-18	44-18	45-18	46-18	47-18	48-18
1-19	2-19	3-19	4-19	5-19	6-19	7-19	8-19	-	-	-	42-19	43-19	44-19	45-19	46-19	47-19	48-19
1-20	2-20	3-20	4-20	5-20	6-20	7-20	8-20	-	-	-	42-20	43-20	44-20	45-20	46-20	47-20	48-20
1-21	2-21	3-21	4-21	5-21	6-21	7-21	8-21	-	-	-	42-21	43-21	44-21	45-21	46-21	47-21	48-21
1-22	2-22	3-22	4-22	5-22	6-22	7-22	8-22	-	-	-	42-22	43-22	44-22	45-22	46-22	47-22	48-22
1-23	2-23	3-23	4-23	5-23	6-23	7-23	8-23	-	-	-	42-23	43-23	44-23	45-23	46-23	47-23	48-23
T1		T2			T3			-	-	-	T15			T16			T17

ANODE CONNECTION

	1G	2G	3G	4G	5G	6G	7G	8G	9G	10G	11G	12G	13G	14G	15G	16G	17G(AD3)	18G(AD4)
D0	1-1	1-1	1-1	1-1	1-1	1-1	1-1	1-1	1-1	1-1	1-1	1-1	1-1	1-1	1-1	1-1	S9	-
D1	2-1	2-1	2-1	2-1	2-1	2-1	2-1	2-1	2-1	2-1	2-1	2-1	2-1	2-1	2-1	2-1	3d	-
D2	3-1	3-1	3-1	3-1	3-1	3-1	3-1	3-1	3-1	3-1	3-1	3-1	3-1	3-1	3-1	3-1	2d	-
D3	4-1	4-1	4-1	4-1	4-1	4-1	4-1	4-1	4-1	4-1	4-1	4-1	4-1	4-1	4-1	4-1	3e	-
D4	5-1	5-1	5-1	5-1	5-1	5-1	5-1	5-1	5-1	5-1	5-1	5-1	5-1	5-1	5-1	5-1	2e	-
D5	1-2	1-2	1-2	1-2	1-2	1-2	1-2	1-2	1-2	1-2	1-2	1-2	1-2	1-2	1-2	1-2	3c	-
D6	2-2	2-2	2-2	2-2	2-2	2-2	2-2	2-2	2-2	2-2	2-2	2-2	2-2	2-2	2-2	2-2	2c	-
D7	3-2	3-2	3-2	3-2	3-2	3-2	3-2	3-2	3-2	3-2	3-2	3-2	3-2	3-2	3-2	3-2	3g	-
D8	4-2	4-2	4-2	4-2	4-2	4-2	4-2	4-2	4-2	4-2	4-2	4-2	4-2	4-2	4-2	4-2	2g	-
D9	5-2	5-2	5-2	5-2	5-2	5-2	5-2	5-2	5-2	5-2	5-2	5-2	5-2	5-2	5-2	5-2	3f	-
D10	1-3	1-3	1-3	1-3	1-3	1-3	1-3	1-3	1-3	1-3	1-3	1-3	1-3	1-3	1-3	1-3	2f	-
D11	2-3	2-3	2-3	2-3	2-3	2-3	2-3	2-3	2-3	2-3	2-3	2-3	2-3	2-3	2-3	2-3	3b	-
D12	3-3	3-3	3-3	3-3	3-3	3-3	3-3	3-3	3-3	3-3	3-3	3-3	3-3	3-3	3-3	3-3	2b	-
D13	4-3	4-3	4-3	4-3	4-3	4-3	4-3	4-3	4-3	4-3	4-3	4-3	4-3	4-3	4-3	4-3	3a	-
D14	5-3	5-3	5-3	5-3	5-3	5-3	5-3	5-3	5-3	5-3	5-3	5-3	5-3	5-3	5-3	5-3	2a	-
D15	1-4	1-4	1-4	1-4	1-4	1-4	1-4	1-4	1-4	1-4	1-4	1-4	1-4	1-4	1-4	1-4	Dp	-
D16	2-4	2-4	2-4	2-4	2-4	2-4	2-4	2-4	2-4	2-4	2-4	2-4	2-4	2-4	2-4	2-4	dB	-
D17	3-4	3-4	3-4	3-4	3-4	3-4	3-4	3-4	3-4	3-4	3-4	3-4	3-4	3-4	3-4	3-4	1d	-
D18	4-4	4-4	4-4	4-4	4-4	4-4	4-4	4-4	4-4	4-4	4-4	4-4	4-4	4-4	4-4	4-4	1e	-
D19	5-4	5-4	5-4	5-4	5-4	5-4	5-4	5-4	5-4	5-4	5-4	5-4	5-4	5-4	5-4	5-4	1c	-
D20	1-5	1-5	1-5	1-5	1-5	1-5	1-5	1-5	1-5	1-5	1-5	1-5	1-5	1-5	1-5	1-5	1g	-
D21	2-5	2-5	2-5	2-5	2-5	2-5	2-5	2-5	2-5	2-5	2-5	2-5	2-5	2-5	2-5	2-5	1f	-
D22	3-5	3-5	3-5	3-5	3-5	3-5	3-5	3-5	3-5	3-5	3-5	3-5	3-5	3-5	3-5	3-5	1b	-
D23	4-5	4-5	4-5	4-5	4-5	4-5	4-5	4-5	4-5	4-5	4-5	4-5	4-5	4-5	4-5	4-5	1a	AUTO
D24	5-5	5-5	5-5	5-5	5-5	5-5	5-5	5-5	5-5	5-5	5-5	5-5	5-5	5-5	5-5	5-5	S1	HDMI
D25	1-6	1-6	1-6	1-6	1-6	1-6	1-6	1-6	1-6	1-6	1-6	1-6	1-6	1-6	1-6	1-6	S2	DIGITAL
D26	2-6	2-6	2-6	2-6	2-6	2-6	2-6	2-6	2-6	2-6	2-6	2-6	2-6	2-6	2-6	2-6	S3	ANALOG
D27	3-6	3-6	3-6	3-6	3-6	3-6	3-6	3-6	3-6	3-6	3-6	3-6	3-6	3-6	3-6	3-6	S4	S.BACK
D28	4-6	4-6	4-6	4-6	4-6	4-6	4-6	4-6	4-6	4-6	4-6	4-6	4-6	4-6	4-6	4-6	S5	DOLBY
D29	5-6	5-6	5-6	5-6	5-6	5-6	5-6	5-6	5-6	5-6	5-6	5-6	5-6	5-6	5-6	5-6	S6	dts
D30	1-7	1-7	1-7	1-7	1-7	1-7	1-7	1-7	1-7	1-7	1-7	1-7	1-7	1-7	1-7	1-7	S7	AUDYSSEY
D31	2-7	2-7	2-7	2-7	2-7	2-7	2-7	2-7	2-7	2-7	2-7	2-7	2-7	2-7	2-7	2-7	S8	TUNED
D32	3-7	3-7	3-7	3-7	3-7	3-7	3-7	3-7	3-7	3-7	3-7	3-7	3-7	3-7	3-7	3-7	MUTE	STEREO
D33	4-7	4-7	4-7	4-7	4-7	4-7	4-7	4-7	4-7	4-7	4-7	4-7	4-7	4-7	4-7	4-7	PCM	RDS
D34	5-7	5-7	5-7	5-7	5-7	5-7	5-7	5-7	5-7	5-7	5-7	5-7	5-7	5-7	5-7	5-7	Z2	SLEEP
AD1	-	-	-	-	-	-	-	-	-	-	-	-	-	-	-	-	DIG.	-
AD2	-	-	-	-	-	-	-	-	-	-	-	-	-	-	-	-	ANA.	-

3. Remote Code Table

Marantz Remote Command Chart

14-Mar-18
V02

x
This pink color's cell = New assigned code

Item: AV Pre/Processor, AV Receiver, Stereo Receiver

*... Note is placed at end of this chart.
Function description is located right end.

Zone		Command Name	Remote Code: RC-5/ RC-5 Ex. Format System	Command	Extension	For search	For AMX Extension Command(*7)	AV Receiver SR6013	AV Receiver SR5013	Slim Line AV Receiver NR1609	Slim Line AV Receiver NR1509
Main Zone	Power Control	POWER ON/OFF	16	12	—	16 12	RCRC516012	X	X	X	X
		POWER ON	16	12	01	16 12 01	RCRC51601201	X	X	X	X
		POWER OFF	16	12	02	16 12 02	RCRC51601202	X	X	X	X
		SYSTEM POWER OFF	16	12	13	16 12 13	RCRC51601213	X	X	X	X
	Volume Control	VOL +	16	16	—	16 16	RCRC516016	X	X	X	X
		VOL -	16	17	—	16 17	RCRC516017	X	X	X	X
		Direct VOLUME	16	111	00-63	16 111 [00-63]	RCRC516111	X	X	X	X
		Audio MUTE ON	16	13	00	16 13 00	RCRC51601300	X	X	X	X
		Audio MUTE OFF	16	13	01	16 13 01	RCRC51601301	X	X	X	X
		Audio MUTE (Toggle)	16	13	—	16 13	RCRC516013	X	X	X	X
	Speaker Output	SPEAKER Sel.	16	29	—	16 29	RCRC516029	X	X	X	X
		SPEAKER-A ON/OFF	16	35	—	16 35	RCRC516035	X	X	X	X
		SPEAKER-B ON/OFF	16	39	—	16 39	RCRC516039	X	X	X	X
	Menu Control	OSD Menu On	16	82	—	16 82	RCRC516082	X	X	X	X
		MENU	16	82	60	16 82 60	RCRC51608260	X	X	X	X
		OPTION	16	82	11	16 82 11	RCRC51608211	X	X	X	X
		EXIT MENU	16	83	—	16 83	RCRC516083	X	X	X	X
		ENTER (OK)	16	87	—	16 87	RCRC516087	X	X	X	X
		Return	16	87	04	16 87 04	RCRC51608704	X	X	X	X
		CURSOR Up	16	80	—	16 80	RCRC516080	X	X	X	X
		CURSOR Down	16	81	—	16 81	RCRC516081	X	X	X	X
		CURSOR Left	16	85	—	16 85	RCRC516085	X	X	X	X
		CURSOR Right	16	86	—	16 86	RCRC516086	X	X	X	X
	Display / Video	Dimmer(Display)	16	15	00	16 15 00	RCRC51601500	X	X	X	X
		Info.	16	15	08	16 15 08	RCRC51601508	X	X	X	X
		OSD Info.	16	15	—	16 15	RCRC516015	X	X	X	X
		Status	16	15	07	16 15 07	RCRC51601507	X	X	X	X
		Video Select	16	15	50	16 15 50	RCRC51601550	X	X	X	X
		VIDEO OFF (V.OFF)	16	13	02	16 13 02	RCRC51601302	—	—	—	—
	Input Source	INPUT NEXT	16	00	13	16 00 13	RCRC51600013	X	X	X	X
		INPUT BACK	16	00	14	16 00 14	RCRC51600014	X	X	X	X
		TUNER (TUNER,FM)	17	63	—	17 63	RCRC517063	X	X	X	X
		Blu-ray(BD)(Code1)	07	63	00	07 63 00	RCRC50706300	X	X	X	X
		Blu-ray(BD)(Code2)	28	63	00	28 63 00	RCRC52806300	X	X	X	X
		Blu-ray/DVD	16	02	04	16 02 04	RCRC51602004	—	—	—	X
		CD	20	63	—	20 63	RCRC520063	X	X	X	X
		TV AUDIO	00	63	—	00 63	RCRC500063	X	X	X	X
		DVD	16	00	10	16 00 10	RCRC51600010	X	X	X	—
		MEDIAPLAYER	05	63	—	05 63	RCRC505063	X	X	X	X
		CBL/SAT	06	63	—	06 63	RCRC506063	X	X	X	X
		AUX1(AUX)	16	00	06	16 00 06	RCRC51600006	X	X	X	X
		AUX2	16	00	07	16 00 07	RCRC51600007	X	X	X	—
		AUX3(Additional Source)	16	00	08	16 00 08	RCRC51600008	—	—	—	—
		AUX4(Additional Source)	16	02	00	16 02 00	RCRC51602000	—	—	—	—
		AUX5(Additional Source)	16	02	01	16 02 01	RCRC51602001	—	—	—	—
		AUX6(Additional Source)	16	02	02	16 02 02	RCRC51602002	—	—	—	—
		AUX7(Additional Source)	16	02	03	16 02 03	RCRC51602003	—	—	—	—
		Bluetooth	16	02	16	16 02 16	RCRC51602016	X	X	X	X
		GAME	16	00	62	16 00 62	RCRC51600062	X	X	X	X
			16	00	08	16 00 08	RCRC51600008	—	—	—	—
		PHONO	21	63	—	21 63	RCRC521063	X	X	X	X
		USB	24	63	01	24 63 01	RCRC52406301	—	—	—	—
			24	63	11	24 63 11	RCRC52406311	X (USB)	X (USB)	X (USB)	X (USB)
		HEOS Music(NETWORK)	24	63	10	24 63 10	RCRC52406310	X (HEOS Music)	X (HEOS Music)	X (HEOS Music)	X (HEOS Music)
		Internet Radio Select	27	63	20	27 63 20	RCRC52706320	X	X	X	X
		SIRIUSXM (*4)	27	63	29	27 63 29	RCRC52706329	—	—	—	—
		Media Server Select	27	63	24	27 63 24	RCRC52706324	—	—	—	—
		Pandora Select (*4)	27	63	26	27 63 26	RCRC52706326	—	—	—	—
		HEOS MUSIC	27	63	10	27 63 10	RCRC52706310	X (HEOS Music)	X (HEOS Music)	X (HEOS Music)	X (HEOS Music)
			27	63	11	27 63 11	RCRC52706311	X (HEOS Music)	X (HEOS Music)	X (HEOS Music)	X (HEOS Music)
		M-XPort	29	63	01	29 63 01	RCRC52906301	—	—	—	—
		7.1 (6.1)CH. Input ON	16	01	12	16 01 12	RCRC51601012	X	X	—	—
	Smart Select	Smart Select1	16	02	21	16 02 21	RCRC51602021	X	X	X	X
		Smart Select2	16	02	22	16 02 22	RCRC51602022	X	X	X	X
		Smart Select3	16	02	23	16 02 23	RCRC51602023	X	X	X	X
		Smart Select4	16	02	24	16 02 24	RCRC51602024	X	X	X	X
		Smart Select5	16	02	25	16 02 25	RCRC51602025	X	X	X	X
	I/O Setting	Input Mode Select	16	01	01	16 01 01	RCRC51601001	X	X	X	X
		INPUT MODE:AUTO	16	01	15	16 01 15	RCRC51601015	X	X	X	X
		INPUT MODE:HDMI	16	01	16	16 01 16	RCRC51601016	X	X	X	X
		INPUT MODE:DIGITAL	16	01	17	16 01 17	RCRC51601017	X	X	X	X
		INPUT MODE:ANALOG	16	01	18	16 01 18	RCRC51601018	X	X	X	X
		Bilingual (Audio Channel)	16	01	14	16 01 14	RCRC51601014	—	—	X	—
		LIP SYNC.(Audio Delay)	16	10	01	16 10 01	RCRC51601001	X	X	X	X
		Resolution(Analog)	16	15	10	16 15 10	RCRC51601510	X	X	X	—
		Resolution(HDMI)	16	15	11	16 15 11	RCRC51601511	X	X	X	—
		Vertical Stretch ON	16	15	12	16 15 12	RCRC51601512	—	—	—	—
		Vertical Stretch OFF	16	15	13	16 15 13	RCRC51601513	—	—	—	—
		HDMI Audio Output Select (Toggle)	16	84	00	16 84 00	RCRC51608400	X	X	X	X
		HDMI Audio Output: Enable (Decode by AVR)	16	84	01	16 84 01	RCRC51608401	X	X	X	X
		HDMI Audio Output: Through (Decode by TV)	16	84	02	16 84 02	RCRC51608402	X	X	X	X
		COMPONENT-2 for MAIN	16	84	31	16 84 31	RCRC51608431	—	—	—	—
		COMPONENT-2 for MULTI-A	16	84	32	16 84 32	RCRC51608432	—	—	—	—
		Video Mode (Toggle)	16	84	50	16 84 50	RCRC51608450	X	X	X	—
		Video Mode: Auto	16	84	51	16 84 51	RCRC51608451	X	X	X	—
		Video Mode: Movie	16	84	52	16 84 52	RCRC51608452	X	X	X	—
		Video Mode: Game	16	84	53	16 84 53	RCRC51608453	X	X	X	—
		HDMI Output Select (Toggle)	16	120	00	16 120 00	RCRC51612000	X	X	—	—
		HDMI Out-1	16	120	01	16 120 01	RCRC51612001	X	X	—	—
		HDMI Out-2	16	120	02	16 120 02	RCRC51612002	X	X	—	—
		HDMI Out-Auto(Dual)	16	120	03	16 120 03	RCRC51612003	X	X	—	—
	CEC	HDMI Control (CEC) ON	16	84	08	16 84 08	RCRC51608408	X	X	X	X
		HDMI Control (CEC) OFF	16	84	09	16 84 09	RCRC51608409	X	X	X	X
	Surround Mode	SURROUND MODE (Toggle/NEXT)	16	37	—	16 37	RCRC516037	X	X	X	X
		SURROUND MODE (Back)	16	64	15	16 64 15	RCRC51606415	X	X	X	X
		MOVIE SURROUND	16	37	29	16 37 29	RCRC51603729	X	X	X	X
		MUSIC SURROUND	16	37	53	16 37 53	RCRC51603753	X	X	X	X
		GAME SURROUND	16	64	18	16 64 18	RCRC51606418	X	X	X	X
		AUTO	16	37	45	16 37 45	RCRC51603745	X	X	X	X
		STEREO	16	37	30	16 37 30	RCRC51603730	X	X	X	X
		MONO	16	37	57	16 37 57	RCRC51603757	—	—	—	—
		MULTI-CH Stereo	16	37	67	16 37 67	RCRC51603767	X	X	X	X
	THX	THX	16	64	13	16 64 13	RCRC51606413	—	—	—	—
		THX CINEMA	16	37	36	16 37 36	RCRC51603736	—	—	—	—
		THX SURROUND EX	16	37	58	16 37 58	RCRC51603758	—	—	—	—
		THX ULTRA 2	16	64	07	16 64 07	RCRC51606407	—	—	—	—
		THX SELECT 2				16 64 07	RCRC51606407	—	—	—	—
		THX 5.1 MUSIC	16	64	04	16 64 04	RCRC51606404	—	—	—	—
		THX GAMES	16	64	14	16 64 14	RCRC51606414	—	—	—	—
		NEURAL	16	64	16	16 64 16	RCRC51606416	—	—	—	—
	Dolby	DOLBY	16	37	41	16 37 41	RCRC51603741	—	—	—	—
		PRO LOGIC	16	37	00	16 37 00	RCRC51603700	—	—	—	—
		PL IIx(z) Movie / PL II Movie	16	64	00	16 64 00	RCRC51606400	—	—	—	X
		PL IIx(z) Music / PL II Music	16	64	01	16 64 01	RCRC51606401	—	—	—	X
		PL IIx Game	16	64	12	16 64 12	RCRC51606412	—	—	—	—
		PL IIz	16	64	17	16 64 17	RCRC51606417	—	—	—	—
		DOLBY HEADPHONE	16	37	60	16 37 60	RCRC51603760	—	—	—	—
		EX/ES	16	37	61	16 37 61	RCRC51603761	—	—	—	—
		Dolby Atmos ON/OFF	16	64	25	16 64 25	RCRC51606425	X	X	X	—
	dts	DTS Mode	16	64	08	16 64 08	RCRC51606408	—	—	—	—
		DTS	16	37	46	16 37 46	RCRC51603746	X	X	X	X
		DTS ES	16	64	03	16 64 03	RCRC51606403	—	—	—	—
		DTS Neo6 Cinema	16	64	05	16 64 05	RCRC51606405	—	—	—	X
		DTS Neo6 Music	16	64	06	16 64 06	RCRC51606406	—	—	—	X
		DTS NEO:X ON/OFF	16	64	22	16 64 22	RCRC51606422	—	—	—	—
		VIRTUAL	16	37	51	16 37 51	RCRC51603751	X	X	X	X
		Decoder Mode	16	01	20	16 01 20	RCRC51600120	—	—	—	—
		DSP MODE	16	37	63	16 37 63	RCRC51603763	—	—	—	—
		SOURCE(Pure) DIRECT (Toggle)	16	34	—	16 34	RCRC516034	X	X	X	X
		PURE DIRECT (Toggle)	16	34	01	16 34 01	RCRC51603401	—	—	—	—
		Direct Mode	16	34	02	16 34 02	RCRC51603402	X	X	X	X
		Pure Direct	16	34	03	16 34 03	RCRC51603403	X	X	X	X
		All Zone Stereo ON/OFF	16	100	00	16 100 00	RCRC51610000	X	X	X	—
		All Zone Stereo ON	16	100	01	16 100 01	RCRC51610001	X	X	X	—
		All Zone Stereo OFF	16	100	02	16 100 02	RCRC51610002	X	X	X	—
	Sound Effect	Cinema EQ (HT-EQ)(Toggle)	16	64	11	16 64 11	RCRC51606411	X(Cinema EQ)	X(Cinema EQ)	X(Cinema EQ)	X(Cinema EQ)
		Loudness Management ON/OFF(Toggle)	16	64	19	16 64 19	RCRC51606419	X	X	X	X
		M-DAX	16	22	04	16 22 04	RCRC51602204	X	X	X	X
		M-DAX OFF	16	22	06	16 22 06	RCRC51602206	X	X	X	X
		M-DAX HIGH	16	22	07	16 22 07	RCRC51602207	X	X	X	X
		M-DAX LOW	16	22	08	16 22 08	RCRC51602208	X	X	X	X
		M-DAX MID	16	22	09	16 22 09	RCRC51602209	X	X	X	X
		Bass Sync UP	16	22	12	16 22 12	RCRC51602212	—	—	—	—
		Bass Sync DOWN	16	22	22	16 22 22	RCRC51602222	—	—	—	—
	Tone / Balance / Trim	TONE CONTROL ON/OFF (Toggle)	16	22	01	16 22 01	RCRC51602201	X	X	X	X
		TONE CONTROL OFF	16	22	10	16 22 10	RCRC51602210	X	X	X	X
		TONE CONTROL ON	16	22	11	16 22 11	RCRC51602211	X	X	X	X
		BASS +	16	22	—	16 22	RCRC516022	X	X	X	X
		BASS -	16	23	—	16 23	RCRC516023	X	X	X	X
		TREBLE +	16	24	—	16 24	RCRC516024	X	X	X	X
		TREBLE -	16	25	—	16 25	RCRC516025	X	X	X	X
		TEST TONE	16	37	21	16 37 21	RCRC51603721	X	X	X	X
		Volume Reset	16	37	31	16 37 31	RCRC51603731	—	—	—	—
		CH. SELECT	16	37	33	16 37 33	RCRC51603733	X	X	X	X
		CH. LEVEL +	16	37	34	16 37 34	RCRC51603734	—	—	—	—
		CH. LEVEL -	16	37	35	16 37 35	RCRC51603735	—	—	—	—
		BALANCE RIGHT	16	26	—	16 26	RCRC516026	—	—	—	—
		BALANCE LEFT	16	27	—	16 27	RCRC516027	—	—	—	—
		Front L (A-TRIM) + (Up)	16	26	01	16 26 01	RCRC51602601	X	X	X	X
		Front L (A-TRIM) - (Down)	16	26	02	16 26 02	RCRC51602602	X	X	X	X
		Front R (B-TRIM) + (Up)	16	26	03	16 26 03	RCRC51602603	X	X	X	X
		Front R (B-TRIM) - (Down)	16	26	04	16 26 04	RCRC51602604	X	X	X	X
		Surround L + (Up)	16	26	05	16 26 05	RCRC51602605	X	X	X	X
		Surround L - (Down)	16	26	06	16 26 06	RCRC51602606	X	X	X	X
		Surround R + (Up)	16	26	07	16 26 07	RCRC51602607	X	X	X	X
		Surround R - (Down)	16	26	08	16 26 08	RCRC51602608	X	X	X	X
		Surround Back L + (Up)	16	26	09	16 26 09	RCRC51602609	X	X	X	—
		Surround Back L - (Down)	16	26	10	16 26 10	RCRC51602610	X	X	X	—
		Surround Back R + (Up)	16	26	11	16 26 11	RCRC51602611	X	X	X	—
		Surround Back R - (Down)	16	26	12	16 26 12	RCRC51602612	X	X	X	—
		Front Wide L + (Up)	16	26	13	17 26 13	RCRC51702613	—	—	—	—
		Front Wide L - (Down)	16	26	14	18 26 14	RCRC51802614	—	—	—	—
		Front Wide R + (Up)	16	26	15	19 26 15	RCRC51902615	—	—	—	—
		Front Wide R - (Down)	16	26	16	20 26 16	RCRC52002616	—	—	—	—
		Front Height L + (Up)	16	26	17	16 26 17	RCRC51602617	X	X	X	—
		Front Height L - (Down)	16	26	18	16 26 18	RCRC51602618	X	X	X	—
		Front Height R + (Up)	16	26	19	16 26 19	RCRC51602619	X	X	X	—
		Front Height R - (Down)	16	26	20	16 26 20	RCRC51602620	X	X	X	—
		Center + (Up)	16	37	11	16 37 11	RCRC51603711	X	X	X	X
		Center - (Down)	16	37	12	16 37 12	RCRC51603712	X	X	X	X
		Subwoofer + (Up)	16	37	49	16 37 49	RCRC51603749	X	X	X	X
		Subwoofer - (Down)	16	37	50	16 37 50	RCRC51603750	X	X	X	X
		Subwoofer 2 + (Up)	16	64	23	16 64 23	RCRC51606423	X	—	—	—
		Subwoofer 2 - (Down)	16	64	24	16 64 24	RCRC51606424	X	—	—	—
		Top Front L + (Up)	16	26	21	16 26 21	RCRC51602621	X	X	X	—
		Top Front L - (Down)	16	26	22	16 26 22	RCRC51602622	X	X	X	—
		Top Front R + (Up)	16	26	23	16 26 23	RCRC51602623	X	X	X	—
		Top Front R - (Down)	16	26	24	16 26 24	RCRC51602624	X	X	X	—
		Top Middle L + (Up)	16	26	25	16 26 25	RCRC51602625	X	X	X	—
		Top Middle L - (Down)	16	26	26	16 26 26	RCRC51602626	X	X	X	—

	Top Middle R + (Up)	16	26	27	16 26 27	RCRC51602627	X	X	X	—
	Top Middle R - (Down)	16	26	28	16 26 28	RCRC51602628	X	X	X	—
	Top Rear L + (Up)	16	26	29	16 26 29	RCRC51602629	X	—	—	—
	Top Rear L - (Down)	16	26	30	16 26 30	RCRC51602630	X	—	—	—
	Top Rear R + (Up)	16	26	31	16 26 31	RCRC51602631	X	—	—	—
	Top Rear R - (Down)	16	26	32	16 26 32	RCRC51602632	X	—	—	—
	Rear Height L + (Up)	16	26	33	16 26 33	RCRC51602633	X	—	—	—
	Rear Height L - (Down)	16	26	34	16 26 34	RCRC51602634	X	—	—	—
	Rear Height R + (Up)	16	26	35	16 26 35	RCRC51602635	X	—	—	—
	Rear Height R - (Down)	16	26	36	16 26 36	RCRC51602636	X	—	—	—
	Front Dolby L + (Up)	16	26	37	16 26 37	RCRC51602637	X	X	X	—
	Front Dolby L - (Down)	16	26	38	16 26 38	RCRC51602638	X	X	X	—
	Front Dolby R + (Up)	16	26	39	16 26 39	RCRC51602639	X	X	X	—
	Front Dolby R - (Down)	16	26	40	16 26 40	RCRC51602640	X	X	X	—
	Surround Dolby L + (Up)	16	26	41	16 26 41	RCRC51602641	X	X	X	—
	Surround Dolby L - (Down)	16	26	42	16 26 42	RCRC51602642	X	X	X	—
	Surround Dolby R + (Up)	16	26	43	16 26 43	RCRC51602643	X	X	X	—
	Surround Dolby R - (Down)	16	26	44	16 26 44	RCRC51602644	X	X	X	—
	Back Dolby L + (Up)	16	26	45	16 26 45	RCRC51602645	X	—	—	—
	Back Dolby L - (Down)	16	26	46	16 26 46	RCRC51602646	X	—	—	—
	Back Dolby R + (Up)	16	26	47	16 26 47	RCRC51602647	X	—	—	—
	Back Dolby R - (Down)	16	26	48	16 26 48	RCRC51602648	X	—	—	—
	Surround Height L + (Up)	16	26	49	16 26 49	RCRC51602649	—	—	—	—
	Surround Height R - (Down)	16	26	50	16 26 50	RCRC51602650	—	—	—	—
	Surround Height L + (Up)	16	26	51	17 26 51	RCRC51602651	—	—	—	—
	Surround Height R - (Down)	16	26	52	17 26 52	RCRC51602652	—	—	—	—
	Top Surround + (Up)	16	26	53	17 26 53	RCRC51602653	—	—	—	—
	Top Surround - (Down)	16	26	54	17 26 54	RCRC51602654	—	—	—	—
	Center Height + (Up)	16	26	55	16 26 55	RCRC51602655	—	—	—	—
	Center Height - (Down)	16	26	56	16 26 56	RCRC51602656	—	—	—	—
Audyssey	Audyssey MultEQ: OFF	16	28	00	16 28 00	RCRC51602800	—	—	—	—
	Audyssey MultEQ MODE (Toggle)	16	28	02	16 28 02	RCRC51602802	X	X	X	X
	Audyssey Dynamic EQ/VOL	16	28	40	16 28 40	RCRC51602840	X	X	X	X
	Audyssey Dynamic EQ Mode	16	28	20	16 28 20	RCRC51602820	X	X	X	X
	Audyssey Dynamic EQ Mode Off	16	28	21	16 28 21	RCRC51602821	X	X	X	X
	Audyssey Dynamic EQ Mode On	16	28	22	16 28 22	RCRC51602822	X	X	X	X
	Audyssey Dynamic Volume Mode	16	28	30	16 28 30	RCRC51602830	X	X	X	X
	Audyssey Dynamic Volume Mode Off	16	28	31	16 28 31	RCRC51602831	X	X	X	X
	Audyssey Dynamic Volume Mode L	16	28	32	16 28 32	RCRC51602832	X	X	X	X
	Audyssey Dynamic Volume Mode M	16	28	33	16 28 33	RCRC51602833	X	X	X	X
	Audyssey Dynamic Volume Mode H	16	28	34	16 28 34	RCRC51602834	X	X	X	X
	Audyssey Dynamic EQ Offset Off	16	28	51	16 28 51	RCRC51602851	X	X	X	X
	Audyssey Dynamic EQ Offset -5dB	16	28	52	16 28 52	RCRC51602852	X	X	X	X
	Audyssey Dynamic EQ Offset -10dB	16	28	53	16 28 53	RCRC51602853	X	X	X	X
	Audyssey Dynamic EQ Offset -15dB	16	28	54	16 28 54	RCRC51602854	X	X	X	X
	Audyssey LFC ON/OFF	16	64	40	16 64 40	RCRC51606440	X	—	—	—
	Audyssey LFC ON	16	64	41	16 64 41	RCRC51606441	X	—	—	—
	Audyssey LFC OFF	16	64	42	16 64 42	RCRC51606442	X	—	—	—
	Audyssey DSX ON/OFF	16	64	50	16 64 50	RCRC51606450	—	—	—	—
	Audyssey DSX OFF	16	64	51	16 64 51	RCRC51606451	—	—	—	—
	Audyssey DSX ON(Height)	16	64	52	16 64 52	RCRC51606452	—	—	—	—
	Audyssey DSX ON(Wide)	16	64	53	16 64 53	RCRC51606453	—	—	—	—
	Audyssey DSX ON(Wide/Height)	16	64	54	16 64 54	RCRC51606454	—	—	—	—
Graphic EQ	Graphic EQ ON/OFF	16	28	10	16 28 10	RCRC51602810	X	X	X	X
	Graphic EQ ON	16	28	12	16 28 12	RCRC51602812	X	X	X	X
	Graphic EQ OFF	16	28	11	16 28 11	RCRC51602811	X	X	X	X
ECO	ECO Mode	16	58	10	16 58 10	RCRC51605810	X	X	X	X
	ECO Mode ON	16	58	12	16 58 12	RCRC51605812	X	X	X	X
	ECO Mode OFF	16	58	11	16 58 11	RCRC51605811	X	X	X	X
	ECO Mode AUTO	16	58	13	16 58 13	RCRC51605813	X	X	X	X
Sleep	SLEEP	16	38	—	16 38	RCRC516038	X	X	X	X
	SLEEP OFF	16	38	00	16 38 00	RCRC51603800	X	X	X	X
Trigger	DC Trgger-1 ON	16	125	01	16 125 01	RCRC51612501	X	X	X	—
	DC Trgger-1 OFF	16	125	02	16 125 02	RCRC51612502	X	X	X	—
	DC-Trgger-2 ON	16	125	03	16 125 03	RCRC51612503	—	—	—	—
	DC-Trgger-2 OFF	16	125	04	16 125 04	RCRC51612504	—	—	—	—
	DC Trgger-3 ON	16	125	05	16 125 05	RCRC51612505	—	—	—	—
	DC Trgger-3 OFF	16	125	06	16 125 06	RCRC51612506	—	—	—	—
	DC-Trgger-4 ON	16	125	07	16 125 07	RCRC51612507	—	—	—	—
	DC-Trgger-4 OFF	16	125	08	16 125 08	RCRC51612508	—	—	—	—
Tuner	BAND	17	47	01	17 47 01	RCRC51704701	X	X	X	X
	FM	17	45	—	17 45	RCRC517045	X	X	X	X
	AM	17	46	—	17 46	RCRC517046	X	X	X	X
	T-MODE	17	37	—	17 37	RCRC517037	X	X	X	X
	MEMO (MEMORY)	17	41	—	17 41	RCRC517041	X	X	X	X
	MEMORY	24	41	50	24 41 50	RCRC52404150	X	X	X	X
	FREQ.(tuning) Up +	17	30	—	17 30	RCRC517030	X	X	X	X
	FREQ.(tuning) Down -	17	31	—	17 31	RCRC517031	X	X	X	X
	PRESET Up +	17	32	—	17 32	RCRC517032	X	X	X	X
	PRESET Down -	17	33	—	17 33	RCRC517033	X	X	X	X
	0 (PRESET 0)	17	00	—	17 00	RCRC517000	X	X	X	X
	1 (PRESET 1)	17	01	—	17 01	RCRC517001	X	X	X	X
	2 (PRESET 2)	17	02	—	17 02	RCRC517002	X	X	X	X
	3 (PRESET 3)	17	03	—	17 03	RCRC517003	X	X	X	X
	4 (PRESET 4)	17	04	—	17 04	RCRC517004	X	X	X	X
	5 (PRESET 5)	17	05	—	17 05	RCRC517005	X	X	X	X
	6 (PRESET 6)	17	06	—	17 06	RCRC517006	X	X	X	X
	7 (PRESET 7)	17	07	—	17 07	RCRC517007	X	X	X	X
	8 (PRESET 8)	17	08	—	17 08	RCRC517008	X	X	X	X
	9 (PRESET 9)	17	09	—	17 09	RCRC517009	X	X	X	X
	Cursor Up	17	80	01	17 80 01	RCRC51708001	X	X	X	X
	Cursor Down	17	81	01	17 81 01	RCRC51708101	X	X	X	X
	Cursor Left	17	85	01	17 85 01	RCRC51708501	X	X	X	X
	Cursor Right	17	86	01	17 86 01	RCRC51708601	X	X	X	X
	Cursor Enter	17	87	01	17 87 01	RCRC51708701	X	X	X	X
	RETURN	17	83	01	17 83 01	RCRC51708301	X	X	X	X
	PTY (For Europe Model) (*5)	17	120	—	17 120	RCRC5170120	X (*5)	X (*5)	X (*5)	X (*5)
	RT (For Europe Model) (*5)	17	120	40	17 120 40	RCRC51712040	X (*5)	X (*5)	X (*5)	X (*5)
	RDS/SEARCH	17	120	60	17 120 60	RCRC51712060	X	X	X	X

	USB	Cursor Up	24	80	01	24 80 01	RCRC52408001	X	X	X	X
		Cursor Down	24	81	01	24 81 01	RCRC52408101	X	X	X	X
		Cursor Left	24	85	01	24 85 01	RCRC52408501	X	X	X	X
		Cursor Right	24	86	01	24 86 01	RCRC52408601	X	X	X	X
		Enter	24	87	01	24 87 01	RCRC52408701	X	X	X	X
		Return	24	87	21	24 87 21	RCRC52408721	X	X	X	X
		Page Previous	24	32	20	24 32 20	RCRC52403220	X	X	X	X
		Page Next	24	33	20	24 33 20	RCRC52403320	X	X	X	X
		Play/Pause	24	53	00	24 53 00	RCRC52405300	X	X	X	X
		Play	24	53	01	24 53 01	RCRC52405301	X	X	X	X
		Pause	24	48	01	24 48 01	RCRC52404801	X	X	X	X
		Stop	24	54	01	24 54 01	RCRC52405401	X	X	X	X
		Next	24	32	01	24 32 01	RCRC52403201	X	X	X	X
		Previous	24	33	01	24 33 01	RCRC52403301	X	X	X	X
		REW (Toggle)	24	50	01	24 50 01	RCRC52405001	—	—	—	—
		FF (Toggle)	24	52	01	24 52 01	RCRC52405201	—	—	—	—
		Random(Toggle)	24	28	01	24 28 01	RCRC52402801	—	—	—	—
		Random Off	24	28	02	24 28 02	RCRC52402802	—	—	—	—
		Random On(Songs)	24	28	03	24 28 03	RCRC52402803	—	—	—	—
		Repeat(Toggle)	24	29	01	24 29 01	RCRC52402901	—	—	—	—
		Repeat Off	24	29	02	24 29 02	RCRC52402902	—	—	—	—
		Repeat One	24	29	03	24 29 03	RCRC52402903	—	—	—	—
		Repeat All	24	29	04	24 29 04	RCRC52402904	—	—	—	—
	Network	Network(DMP): Random (toggle)	27	28	01	27 28 01	RCRC52702801	—	—	—	—
		Network(DMP): Random Off	27	28	02	27 28 02	RCRC52702802	—	—	—	—
		Network(DMP): Random On	27	28	03	27 28 03	RCRC52702803	—	—	—	—
		Network(DMP): Repeat (toggle)	27	29	01	27 29 01	RCRC52702901	—	—	—	—
		Network(DMP): Repeat Off	27	29	02	27 29 02	RCRC52702902	—	—	—	—
		Network(DMP): Repeat One	27	29	03	27 29 03	RCRC52702903	—	—	—	—
		Network(DMP): Repeat All	27	29	04	27 29 04	RCRC52702904	—	—	—	—
		Network(DMP)/USB: Next	27	32	01	27 32 01	RCRC52703201	X	X	X	X
		Network(DMP)/USB: Previous	27	33	01	27 33 01	RCRC52703301	X	X	X	X
		Network(DMP)/USB: Pause	27	48	01	27 48 01	RCRC52704801	X	X	X	X
		Network(DMP)/USB: REW	27	50	01	27 50 01	RCRC52705001	—	—	—	—
		Network(DMP)/USB: FF	27	52	01	27 52 01	RCRC52705201	—	—	—	—
		Network(DMP): Play/(Pause)	27	53	01	27 53 01	RCRC52705301	X	X	X	X
		Internet Radio - Recent Played Station	27	53	50	27 53 50	RCRC52705350	X	X	X	X
		Network(DMP): Stop	27	54	01	27 54 01	RCRC52705401	X	X	X	X
		MEMORY	27	41	50	27 41 50	RCRC52704150	—	—	—	—
		Network(DMP): Cursor Up	27	80	01	27 80 01	RCRC52708001	X	X	X	X
		Network(DMP): Cursor Down	27	81	01	27 81 01	RCRC52708101	X	X	X	X
		Network(DMP): Cursor Left	27	85	01	27 85 01	RCRC52708501	X	X	X	X
		Network(DMP): Cursor Right	27	86	01	27 86 01	RCRC52708601	X	X	X	X
		Network(DMP): Enter	27	87	01	27 87 01	RCRC52708701	X	X	X	X
		Network(DMP): Page Next	27	80	04	27 80 04	RCRC52708004	X	X	X	X
		Network(DMP): Page Previous	27	81	04	27 81 04	RCRC52708104	X	X	X	X
		Network(DMP): Return	27	87	21	27 87 21	RCRC52708721	X	X	X	X
		Network(DMP):HOME	27	82	02	27 82 02	RCRC52708202	—	—	—	—
2nd Zone (Multi Zone A)	Power Control	POWER ON/OFF	16	29	00	16 29 00	RCRC51602900	X	X	X	—
		POWER ON	16	29	03	16 29 03	RCRC51602903	X	X	X	—
		POWER OFF	16	29	04	16 29 04	RCRC51602904	X	X	X	—
	Volume Control	VOL. +	16	29	01	16 29 01	RCRC51602901	X	X	X	—
		VOL. -	16	29	02	16 29 02	RCRC51602902	X	X	X	—
		Direct VOLUME	16	113	00-53	16 113 (00-53)	RCRC51611300-53	X	X	X	—
		MUTE	16	29	08	16 29 08	RCRC51602908	X	X	X	—
	Input Source	INPUT NEXT	16	30	03	16 30 03	RCRC51603003	X	X	X	—
		INPUT BACK	16	30	04	16 30 04	RCRC51603004	X	X	X	—
		Source call	16	30	10	16 30 10	RCRC51603010	X	X	X	—
		CD	16	29	11	16 29 11	RCRC51602911	X	X	X	—
		TV AUDIO(TV)	16	29	15	16 29 15	RCRC51602915	X	X	X	—
		DVD	16	29	16	16 29 16	RCRC51602916	X	X	X	—
		MEDIAPLAYER	16	29	17	16 29 17	RCRC51602917	X	X	X	—
		CBL/SAT	16	29	19	16 29 19	RCRC51602919	X	X	X	—
		AUX1(AUX)	16	29	20	16 29 20	RCRC51602920	X	X	X	—
		AUX2	16	29	21	16 29 21	RCRC51602921	X	X	X	—
		AUX3(Additional Source)	16	29	24	16 29 24	RCRC51602924	—	—	—	—
		AUX4(Additional Source)	16	29	25	16 29 25	RCRC51602925	—	—	—	—
		AUX5(Additional Source)	16	29	26	16 29 26	RCRC51602926	—	—	—	—
		AUX6(Additional Source)	16	29	27	16 29 27	RCRC51602927	—	—	—	—
		AUX7(Additional Source)	16	29	28	16 29 28	RCRC51602928	—	—	—	—
		TUNER (TUNER 1,FM)	16	29	30	16 29 30	RCRC51602930	X	X	X	—
		HEOS Music(NETWORK)	16	29	23	16 29 23	RCRC51602923	X (HEOS Music)	X (HEOS Music)	X (HEOS Music)	—
		USB	16	30	11	16 30 11	RCRC51603011	X (iPod/USB)	X (iPod/USB)	X (USB)	—
		Blu-ray(BD)	16	30	12	16 30 12	RCRC51603012	X	X	X	—
		M-XPort	16	30	13	16 30 13	RCRC51603013	—	—	—	—
		Game	16	30	14	16 30 14	RCRC51603014	X	X	X	—
		PHONO	16	30	15	16 30 15	RCRC51603015	X	X	X	—
		Bluetooth	16	30	16	16 30 16	RCRC51603016	X	X	X	—
		Internet Radio	27	92	20	27 92 20	RCRC52709220	X	X	X	—
		SIRIUSXM (*4)	27	92	29	27 92 29	RCRC52709229	—	—	—	—
		Media Server	27	92	24	27 92 24	RCRC52709224	—	—	—	—
		Pandora (*4)	27	92	26	27 92 26	RCRC52709226	—	—	—	—
	Smart Select	Smart Select1	16	30	21	16 30 21	RCRC51603021	X	X	X	—
		Smart Select2	16	30	22	16 30 22	RCRC51603022	X	X	X	—
		Smart Select3	16	30	23	16 30 23	RCRC51603023	X	X	X	—
		Smart Select4	16	30	24	16 30 24	RCRC51603024	X	X	X	—
		Smart Select5	16	30	25	16 30 25	RCRC51603025	X	X	X	—
	Control	Cursor Up	16	31	10	16 31 10	RCRC51603110	X	X	X	—
		Cursor Down	16	31	11	16 31 11	RCRC51603111	X	X	X	—
		Cursor Left	16	31	12	16 31 12	RCRC51603112	X	X	X	—
		Cursor Right	16	31	13	16 31 13	RCRC51603113	X	X	X	—
		Enter	16	31	14	16 31 14	RCRC51603114	X	X	X	—
		Return	16	31	15	16 31 15	RCRC51603115	X	X	X	—
		Memory	16	31	16	16 30 14	RCRC51603014	X	X	X	—
	Sleep	SLEEP (Toggle)	16	29	10	16 29 10	RCRC51602910	X	X	X	—
		SLEEP OFF	16	38	10	16 38 10	RCRC51603810	X	X	X	—
	Tuner	[Tuner-1] 0	17	29	00	17 29 00	RCRC51702900	X	X	X	—
		[Tuner-1] 1	17	29	01	17 29 01	RCRC51702901	X	X	X	—
		[Tuner-1] 2	17	29	02	17 29 02	RCRC51702902	X	X	X	—
		[Tuner-1] 3	17	29	03	17 29 03	RCRC51702903	X	X	X	—

		[Tuner-1] 4	17	29	04	17 29 04	RCRC51702904	X	X	X	—
		[Tuner-1] 5	17	29	05	17 29 05	RCRC51702905	X	X	X	—
		[Tuner-1] 6	17	29	06	17 29 06	RCRC51702906	X	X	X	—
		[Tuner-1] 7	17	29	07	17 29 07	RCRC51702907	X	X	X	—
		[Tuner-1] 8	17	29	08	17 29 08	RCRC51702908	X	X	X	—
		[Tuner-1] 9	17	29	09	17 29 09	RCRC51702909	X	X	X	—
		[Tuner-1] FM	17	29	10	17 29 10	RCRC51702910	X	X	X	—
		[Tuner-1] AM	17	29	11	17 29 11	RCRC51702911	X	X	X	—
		[Tuner-1] PRESET Up +	17	29	13	17 29 13	RCRC51702913	X	X	X	—
		[Tuner-1] PRESET Down -	17	29	14	17 29 14	RCRC51702914	X	X	X	—
		[Tuner-1] FREQ.(tuning) Up +	17	29	15	17 29 15	RCRC51702915	X	X	X	—
		[Tuner-1] FREQ.(tuning) Down -	17	29	16	17 29 16	RCRC51702916	X	X	X	—
		[Tuner-1] T-MODE	17	29	17	17 29 17	RCRC51702917	X	X	X	—
		BAND (FM/AM)	17	29	61	17 29 61	RCRC51702961	X	X	X	—
		RDS/SEARCH	17	29	62	17 29 62	RCRC51702962	X	X	X	—
	USB	Next	24	32	02	24 32 02	RCRC52403202	X	X	X	—
		Previous	24	33	02	24 33 02	RCRC52403302	X	X	X	—
		Random (Toggle)	24	41	01	24 41 01	RCRC52404101	—	—	—	—
		Random On	24	41	02	24 41 02	RCRC52404102	—	—	—	—
		Random Off	24	41	03	24 41 03	RCRC52404103	—	—	—	—
		Repeat(toggle)	24	42	01	24 42 01	RCRC52404201	—	—	—	—
		Repeat Off	24	42	02	24 42 02	RCRC52404202	—	—	—	—
		Repeat One	24	42	03	24 42 03	RCRC52404203	—	—	—	—
		Repeat All	24	42	04	24 42 04	RCRC52404204	—	—	—	—
		Pause	24	48	02	24 48 02	RCRC52404802	X	X	X	—
		REW (Toggle)	24	50	02	24 50 02	RCRC52405002	—	—	—	—
		FF (Toggle)	24	52	02	24 52 02	RCRC52405202	—	—	—	—
		Play	24	53	02	24 53 02	RCRC52405302	X	X	X	—
		Play/Pause	24	53	10	24 53 10	RCRC52405310	X	X	X	—
		iPod Play	24	53	32	24 53 32	RCRC52405332	—	—	—	—
			27	53	32	27 53 32	RCRC52705332	—	—	—	—
		USB Direct Play	24	53	61	24 53 61	RCRC52405361	—	—	—	—
		Stop	24	54	02	24 54 02	RCRC52405402	X	X	X	—
	Network	Network(DMP): Next	27	32	02	27 32 02	RCRC52703202	X	X	X	—
		Network(DMP): Previous	27	33	02	27 33 02	RCRC52703302	X	X	X	—
		JPEG Skip + (Next)	27	32	11	27 32 11	RCRC52703211	—	—	—	—
		JPEG Skip - (Previous)	27	33	11	27 33 11	RCRC52703311	—	—	—	—
		Network(DMP): Random (toggle)	27	41	01	27 41 01	RCRC52704101	—	—	—	—
		Network(DMP): Random Off	27	41	02	27 41 02	RCRC52704102	—	—	—	—
		Network(DMP): Random On	27	41	03	27 41 03	RCRC52704103	—	—	—	—
		Memory	27	41	52	27 41 52	RCRC52704152	—	—	—	—
		Network(DMP): Repeat (toggle)	27	42	01	27 42 01	RCRC52704201	—	—	—	—
		Network(DMP): Repeat Off	27	42	02	27 42 02	RCRC52704202	—	—	—	—
		Network(DMP): Repeat 1	27	42	03	27 42 03	RCRC52704203	—	—	—	—
		Network(DMP): Repeat All	27	42	04	27 42 04	RCRC52704204	—	—	—	—
		Network(DMP)/USB: REW	27	50	02	27 50 02	RCRC52705002	—	—	—	—
		Network(DMP)/USB: FF	27	52	02	27 52 02	RCRC52705202	—	—	—	—
		Network(DMP): Play/Pause	27	53	02	27 53 02	RCRC52705302	X	X	X	—
		Internet Radio - Recent Played Station	27	53	51	27 53 51	RCRC52705351	X	X	X	—
		Favorite Direct Play	27	53	62	27 53 62	RCRC52705362	—	—	—	—
		Network(DMP): Stop	27	54	02	27 54 02	RCRC52705402	X	X	X	—
		Network(DMP): Pause	27	48	02	27 48 02	RCRC52704802	X	X	X	—
		Network(DMP): Cursor Up	27	80	02	27 80 02	RCRC52708002	X	X	X	—
		Network(DMP): Cursor Down	27	81	02	27 81 02	RCRC52708102	X	X	X	—
		Network(DMP): Cursor Left	27	85	02	27 85 02	RCRC52708502	X	X	X	—
		Network(DMP): Cursor Right	27	86	02	27 86 02	RCRC52708602	X	X	X	—
		Network(DMP): Enter	27	87	02	27 87 02	RCRC52708702	X	X	X	—
		Network(DMP): Page Previous	27	29	13	27 29 13	RCRC52702913	X	X	X	—
		Network(DMP): Page Next	27	29	14	28 29 14	RCRC52802914	X	X	X	—
		Network(DMP): Back(Return)	27	83	02	27 83 02	RCRC52708302	X (Return)	X (Return)	X (Return)	—
		Network(DMP):HOME	27	84	02	27 84 02	RCRC52708402	—	—	—	—
3rd Zone (Multi Zone B)	Power Control	POWER ON/OFF (Toggle)	16	93	00	16 93 00	RCRC51609300	—	—	—	—
		POWER ON	16	93	03	16 93 03	RCRC51609303	—	—	—	—
		POWER OFF	16	93	04	16 93 04	RCRC51609304	—	—	—	—
	Volume Control	VOL. +	16	93	01	16 93 01	RCRC51609301	—	—	—	—
		VOL. -	16	93	02	16 93 02	RCRC51609302	—	—	—	—
		Direct VOLUME	16	113	00-63	16 113 [00-63]	RCRC51613[00-63]	—	—	—	—
		MUTE (Toggle)	16	93	08	16 93 08	RCRC51609308	—	—	—	—
	Input Source	INPUT NEXT	16	92	03	16 92 03	RCRC51609203	—	—	—	—
		INPUT BACK	16	92	04	16 92 04	RCRC51609204	—	—	—	—
		Source Call	16	92	10	16 92 10	RCRC51609210	—	—	—	—
		USB	16	92	11	16 92 11	RCRC51609211	—	—	—	—
		Blu-ray(BD)	16	92	12	16 92 12	RCRC51609212	—	—	—	—
		M-XPort	16	92	13	16 92 13	RCRC51609213	—	—	—	—
		Game	16	92	14	16 92 14	RCRC51609214	—	—	—	—
		PHONO	16	92	15	16 92 15	RCRC51609215	—	—	—	—
		Bluetooth	16	92	16	16 92 16	RCRC51609216	—	—	—	—
		CD	16	93	11	16 93 11	RCRC51609311	—	—	—	—
		TV AUDIO(TV)	16	93	15	16 93 15	RCRC51609315	—	—	—	—
		DVD	16	93	16	16 93 16	RCRC51609316	—	—	—	—
		MEDIAPLAYER(VCR1)	16	93	17	16 93 17	RCRC51609317	—	—	—	—
		VCR2	16	93	18	16 93 18	RCRC51609318	—	—	—	—
		CBL/SAT(SAT)	16	93	19	16 93 19	RCRC51609319	—	—	—	—
		AUX1(AUX)	16	93	20	16 93 20	RCRC51609320	—	—	—	—
		AUX2	16	93	21	16 93 21	RCRC51609321	—	—	—	—
		AUX3(Additional Source)	16	93	24	16 93 24	RCRC51609324	—	—	—	—
		AUX4(Additional Source)	16	93	25	17 93 25	RCRC51709325	—	—	—	—
		AUX5(Additional Source)	16	93	26	18 93 26	RCRC51809326	—	—	—	—
		AUX6(Additional Source)	16	93	27	19 93 27	RCRC51909327	—	—	—	—
		AUX7(Additional Source)	16	93	28	20 93 28	RCRC52009328	—	—	—	—
		HEOS Music(NETWORK)	16	93	23	16 29 23	RCRC51602923	—	—	—	—
		TUNER(TUNER 1,FM)	16	93	30	16 93 30	RCRC51609330	—	—	—	—
		TUNER-2	16	93	31	16 93 31	RCRC51609331	—	—	—	—
		Internet Radio	27	95	20	27 95 20	RCRC52709520	—	—	—	—
		SIRIUSXM (*4)	27	95	29	27 95 29	RCRC52709529	—	—	—	—
		Media Server	27	95	24	27 95 24	RCRC52709524	—	—	—	—
		Pandora (*4)	27	95	26	27 95 26	RCRC52709526	—	—	—	—
	Smart Select	Smart Select1	16	92	21	16 92 21	RCRC51609221	—	—	—	—
		Smart Select2	16	92	22	16 92 22	RCRC51609222	—	—	—	—
		Smart Select3	16	92	23	16 92 23	RCRC51609223	—	—	—	—
		Smart Select4	16	92	24	16 92 24	RCRC51609224	—	—	—	—
		Smart Select5	16	92	25	16 92 25	RCRC51609225	—	—	—	—
	Control	Cursor Up	16	91	10	16 91 10	RCRC51609110	—	—	—	—
		Cursor Down	16	91	11	16 91 11	RCRC51609111	—	—	—	—
		Cursor Left	16	91	12	16 91 12	RCRC51609112	—	—	—	—
		Cursor Right	16	91	13	16 91 13	RCRC51609113	—	—	—	—
		Enter	16	91	14	16 92 14	RCRC51609214	—	—	—	—
		Return	16	91	15	16 91 15	RCRC51609115	—	—	—	—
		Memory	16	91	16	16 91 16	RCRC51609116	—	—	—	—
	Sleep	SLEEP (Toggle)	16	93	10	16 93 10	RCRC51609310	—	—	—	—
		SLEEP OFF	16	38	20	16 38 20	RCRC51603820	—	—	—	—
	Tuner	[Tuner-1] 0	17	93	00	17 93 00	RCRC51709300	—	—	—	—
		[Tuner-1] 1	17	93	01	17 93 01	RCRC51709301	—	—	—	—
		[Tuner-1] 2	17	93	02	17 93 02	RCRC51709302	—	—	—	—
		[Tuner-1] 3	17	93	03	17 93 03	RCRC51709303	—	—	—	—
		[Tuner-1] 4	17	93	04	17 93 04	RCRC51709304	—	—	—	—
		[Tuner-1] 5	17	93	05	17 93 05	RCRC51709305	—	—	—	—
		[Tuner-1] 6	17	93	06	17 93 06	RCRC51709306	—	—	—	—
		[Tuner-1] 7	17	93	07	17 93 07	RCRC51709307	—	—	—	—
		[Tuner-1] 8	17	93	08	17 93 08	RCRC51709308	—	—	—	—
		[Tuner-1] 9	17	93	09	17 93 09	RCRC51709309	—	—	—	—
		[Tuner-1] FM	17	93	10	17 93 10	RCRC51709310	—	—	—	—
		[Tuner-1] AM	17	93	11	17 93 11	RCRC51709311	—	—	—	—
		[Tuner-1] PRESET Up +	17	93	13	17 93 13	RCRC51709313	—	—	—	—
		[Tuner-1] PRESET Down -	17	93	14	17 93 14	RCRC51709314	—	—	—	—
		[Tuner-1] FREQ.(tuning) Up +	17	93	15	17 93 15	RCRC51709315	—	—	—	—
		[Tuner-1] FREQ.(tuning) Down -	17	93	16	17 93 16	RCRC51709316	—	—	—	—
		[Tuner-1] T-MODE	17	93	17	17 93 17	RCRC51709317	—	—	—	—
		BAND (FM/AM)	17	93	61	17 93 61	RCRC51709361	—	—	—	—
		RDS/SEARCH	17	93	62	17 93 62	RCRC51709362	—	—	—	—
	USB	Zone 3: USB: Next	24	32	03	24 32 03	RCRC52403203	—	—	—	—
		Zone 3: USB: Previous	24	33	03	24 33 03	RCRC52403303	—	—	—	—
		Zone 3: USB: Random Mode	24	44	01	24 44 01	RCRC52404401	—	—	—	—
		Zone 3: USB: Random Off	24	44	02	24 44 02	RCRC52404402	—	—	—	—
		Zone 3: USB: Random On	24	44	03	24 44 03	RCRC52404403	—	—	—	—
		Zone 3: USB: Repeat Mode	24	45	01	24 45 01	RCRC52404501	—	—	—	—
		Zone 3: USB: Repeat Off	24	45	02	24 45 02	RCRC52404502	—	—	—	—
		Zone 3: USB: Repeat One	24	45	03	24 45 03	RCRC52404503	—	—	—	—
		Zone 3: USB: Repeat All	24	45	04	24 45 04	RCRC52404504	—	—	—	—
		Zone 3: USB: Pause	24	48	03	24 48 03	RCRC52404803	—	—	—	—
		Zone 3: USB: REW	24	50	03	24 50 03	RCRC52405003	—	—	—	—
		Zone 3: USB: FF	24	52	03	24 52 03	RCRC52405203	—	—	—	—
		Zone 3: USB: Play/Pause	24	53	03	24 53 03	RCRC52405303	—	—	—	—
		Zone 3: iPod Play	24	53	33	24 53 33	RCRC52405333	—	—	—	—
		Zone 3: USB: Stop	24	54	03	24 54 03	RCRC52405403	—	—	—	—
		Zone 3: USB Direct Play	24	53	62	24 53 62	RCRC52405362	—	—	—	—
	Network	Network(DMP): Next Track(file)	27	32	03	27 32 03	RCRC52703203	—	—	—	—
		Network(DMP): Previous Track(file)	27	33	03	27 33 03	RCRC52703303	—	—	—	—
		Network: Jpeg Skip +	27	32	12	27 32 12	RCRC52703212	—	—	—	—
		Network: Jpeg Skip -	27	33	12	27 33 12	RCRC52703312	—	—	—	—
		Network(DMP): Repeat (toggle)	27	45	01	27 45 01	RCRC52704501	—	—	—	—
		Network(DMP): Repeat Off	27	45	02	27 45 02	RCRC52704502	—	—	—	—
		Network(DMP): Repeat 1	27	45	03	27 45 03	RCRC52704503	—	—	—	—
		Network(DMP): Repeat All	27	45	04	27 45 04	RCRC52704504	—	—	—	—
		Network(DMP): Pause	27	48	03	27 48 03	RCRC52704803	—	—	—	—
		Network(DMP): REW	27	50	03	27 50 03	RCRC52705003	—	—	—	—
		Network(DMP): FF	27	52	03	27 52 03	RCRC52705203	—	—	—	—
		Network(DMP): Play/Pause	27	53	03	27 53 03	RCRC52705303	—	—	—	—
		iPod Direct Play	27	53	33	27 53 33	RCRC52705333	—	—	—	—
		Internet Radio Recent Played Station	27	53	52	27 53 52	RCRC52705352	—	—	—	—
		Network: Favorite Direct Play	27	53	63	27 53 63	RCRC52705363	—	—	—	—
		Network(DMP): Stop	27	54	03	27 54 03	RCRC52705403	—	—	—	—
		Network(DMP): Cursor Up	27	80	03	27 80 03	RCRC52708003	—	—	—	—
		Network(DMP): Cursor Down	27	81	03	27 81 03	RCRC52708103	—	—	—	—
		Network(DMP): Cursor Left	27	85	03	27 85 03	RCRC52708503	—	—	—	—
		Network(DMP): Cursor Right	27	86	03	27 86 03	RCRC52708603	—	—	—	—
		Network(DMP): Enter	27	87	03	27 87 03	RCRC52708703	—	—	—	—
		Network(DMP): Back(Return)	27	83	03	27 83 03	RCRC52708303	—	—	—	—
		Network(DMP):HOME	27	88	02	27 88 02	RCRC52708802	—	—	—	—
		Page Previous	27	93	13	27 93 13	RCRC52709313	—	—	—	—
		Page Next	27	93	14	27 93 14	RCRC52709314	—	—	—	—

Notes: Specifications subject to change without prior notice.

X	The command is available for the model.
—	The command is NOT available for the model.

* 1 Main room commands work as Multi room commands when the Multi room RC-IN input was used.
These commands are recognized as for Main room(zone) commands when they are received via Front IR receiver or Rear Remote Control In.
These commands are recognized as for Multi room(zone) commands when they are received via Rear Multi room Remote In.

*2 Need an input assign to the input in Menu in advance the use

*4 /U1x version (for North America) model only

*5 /N1x version (for Europe) model only

*6 /U1x (for North America), /N1x version (for Europe) model only

*7 The RC code can be sent using RS-232C/IP Serial protocol commands

MECHANICAL

DISASSEMBLY

Flowchart
1. FRONT ASSY
2. RADIATOR ASSY
3. TUNER PCB
4. REAR PANEL
5. DIGITAL PCB
6. VIDEO PCB
7. INPUT PCB
8. SPK PCB
9. SMPS PCB
10. TRANS

EXPLODED VIEW

PACKAGING VIEW

DISASSEMBLY

Flowchart

- Remove each part following the flow below.
- Reassemble the removed parts in the reverse order.
- Read "SAFETY PRECAUTIONS" before reassembling the removed parts.
- If wire bundles are removed or moved during adjustment or part replacement, reshape the wires after completing the work. Failure to shape the wires correctly may cause problems such as noise.
- See "EXPLODED VIEW"

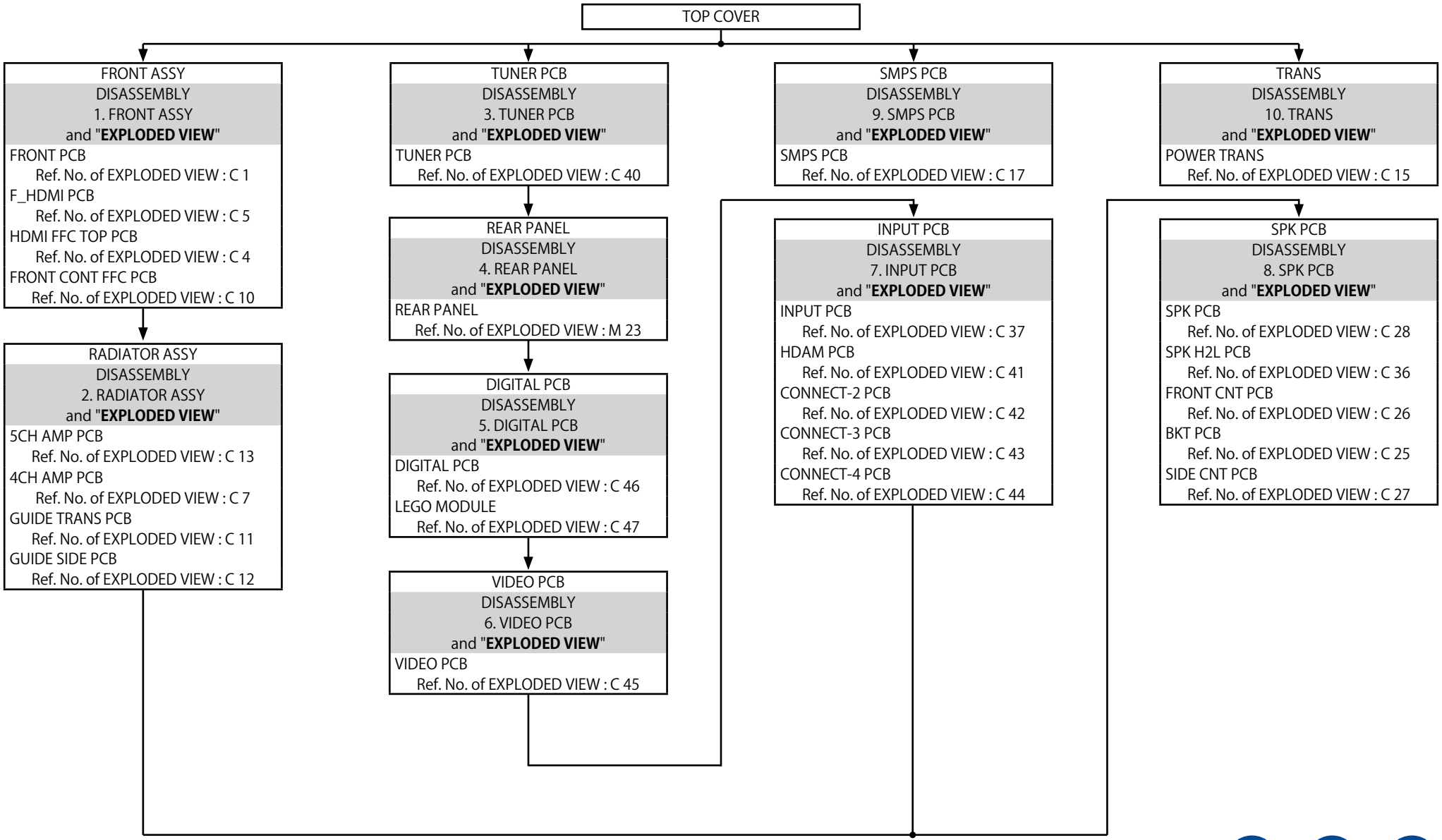

Explanatory Photos for DISASSEMBLY

- For the shooting direction of each photos used in this manual, see the photo below.
- **A, B, C and D** in the photo below indicate the shooting directions of photos.
- The photographs with no shooting direction indicated were taken from the top of the unit.
- Photos of SR6013 U are used in this manual.

The viewpoint of each photograph

(Shooting direction : X) [View from the top]

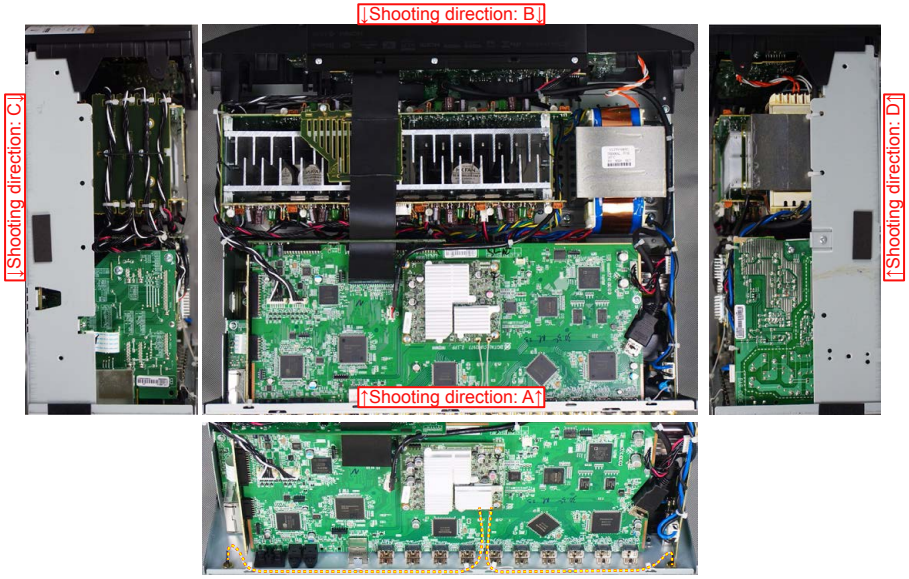

1. FRONT ASSY

Proceeding : TOP COVER → FRONT ASSY

(1) Remove the screws.

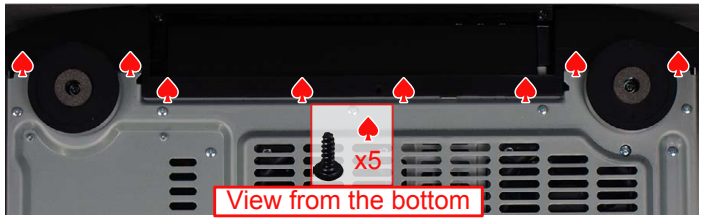

(2) Remove the screws. Remove the STYLE PIN and connectors. Remove the FFC. Cut the wire clamps.

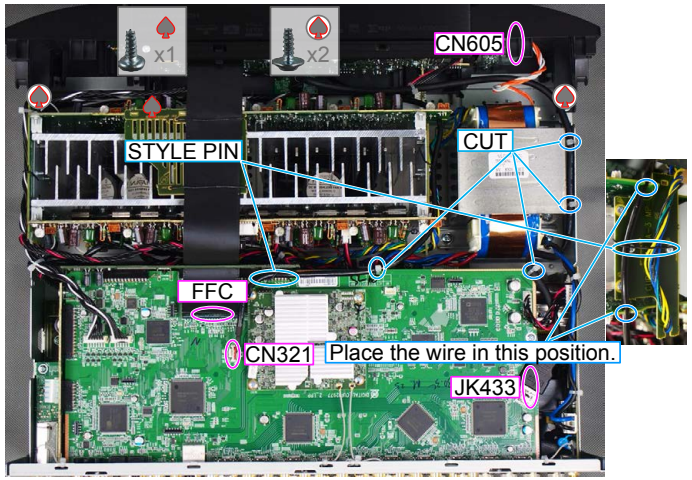

2. RADIATOR ASSY

Proceeding : TOP COVER → FRONT ASSY → RADIATOR ASSY

(1) Remove the screws.

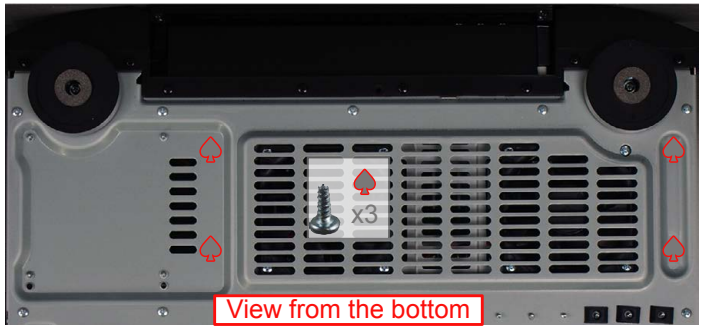

(2) Cut the wire clamp, then remove the connector.

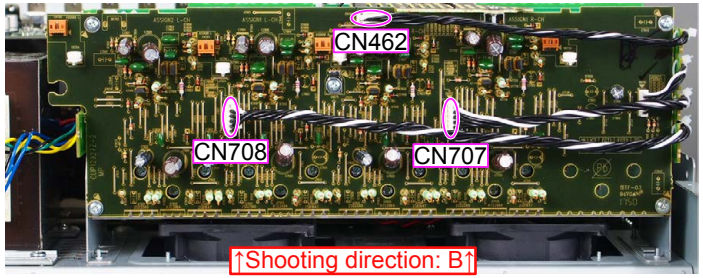

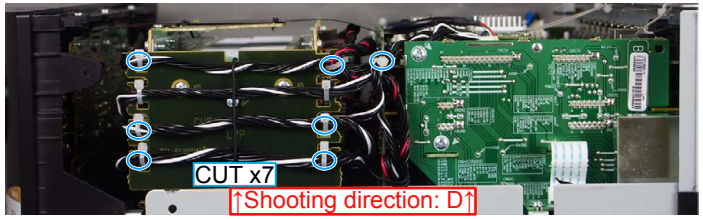

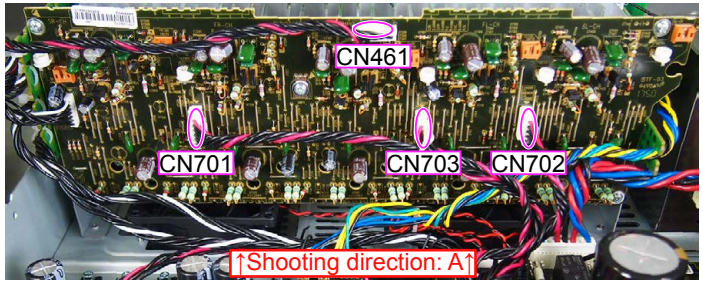

(3) Remove the connector.

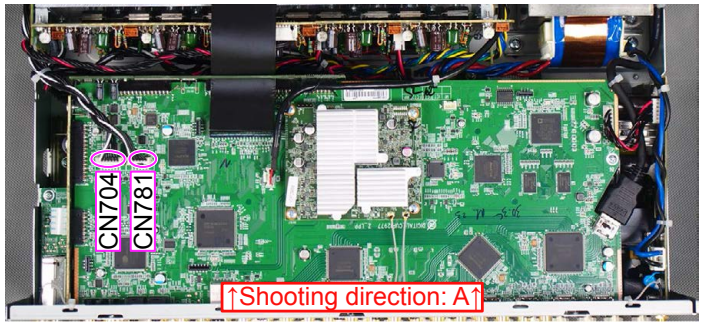

3. TUNER PCB

Proceeding : TOP COVER → TUNER PCB

See "EXPLODED VIEW" for instructions on removing the TUNER PCB.

4. REAR PANEL

Proceeding : TOP COVER → TUNER PCB → REAR PANEL

(1) Remove the screws.

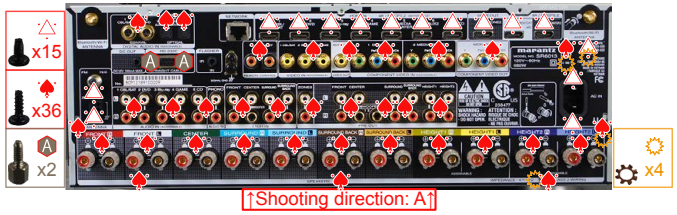

5. DIGITAL PCB

Proceeding : TOP COVER → TUNER PCB → REAR PANEL → DIGITAL PCB

(1) Remove the screws. Remove the Rivet. Cut the wire clamp, then remove the connector. Remove the FFC. Remove the STYLE PIN.

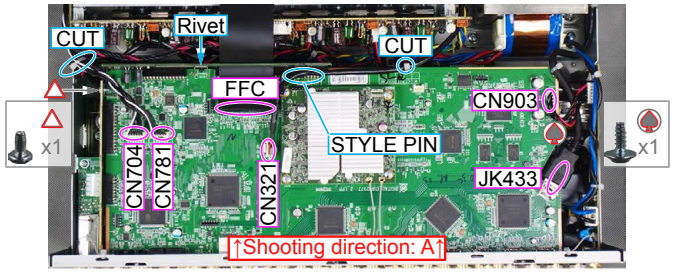

(2) Remove the connector.

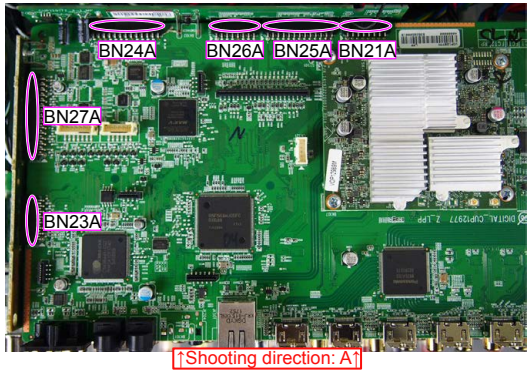

6. VIDEO PCB

Proceeding : TOP COVER → TUNER PCB → REAR PANEL → DIGITAL PCB → VIDEO PCB

(1) Remove the connector.

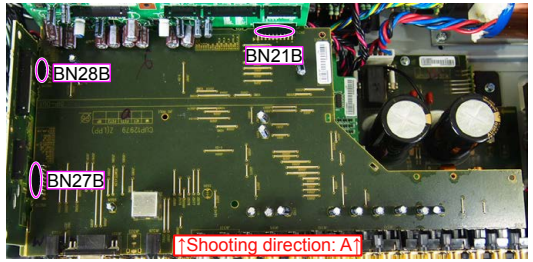

7. INPUT PCB

Proceeding : TOP COVER → TUNER PCB → REAR PANEL → DIGITAL PCB → VIDEO PCB → INPUT PCB

(1) Remove the screws. Remove the connector. Remove the STYLE PIN.

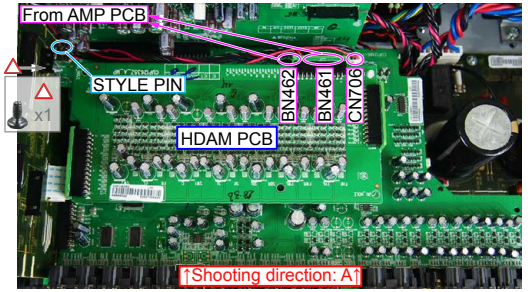

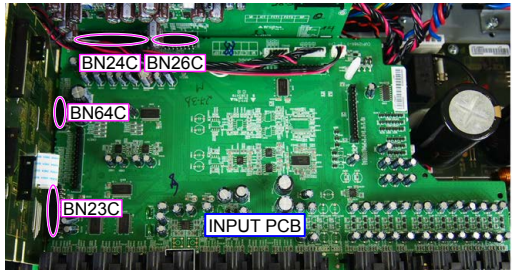

8. SPK PCB

Proceeding : TOP COVER → FRONT ASSY → RADIATOR ASSY → TUNER PCB → REAR PANEL → DIGITAL PCB → VIDEO PCB → INPUT PCB → SPK PCB

(1) Remove the screws.

(2) Remove the screws. Remove the connector. Remove the STYLE PIN.

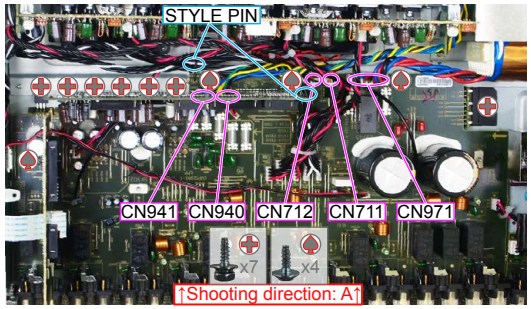

9. SMPS PCB

Proceeding : TOP COVER → SMPS PCB

See "EXPLODED VIEW" for instructions on removing the SMPS PCB.

10. TRANS

Proceeding : TOP COVER → TRANS

See "EXPLODED VIEW" for instructions on removing the transformer (TRANS).

EXPLODED VIEW

Parts List : http://dmedia.dmglobal.com/Document/DocumentDetails/24550

EXPLODED VIEW [SR6013]

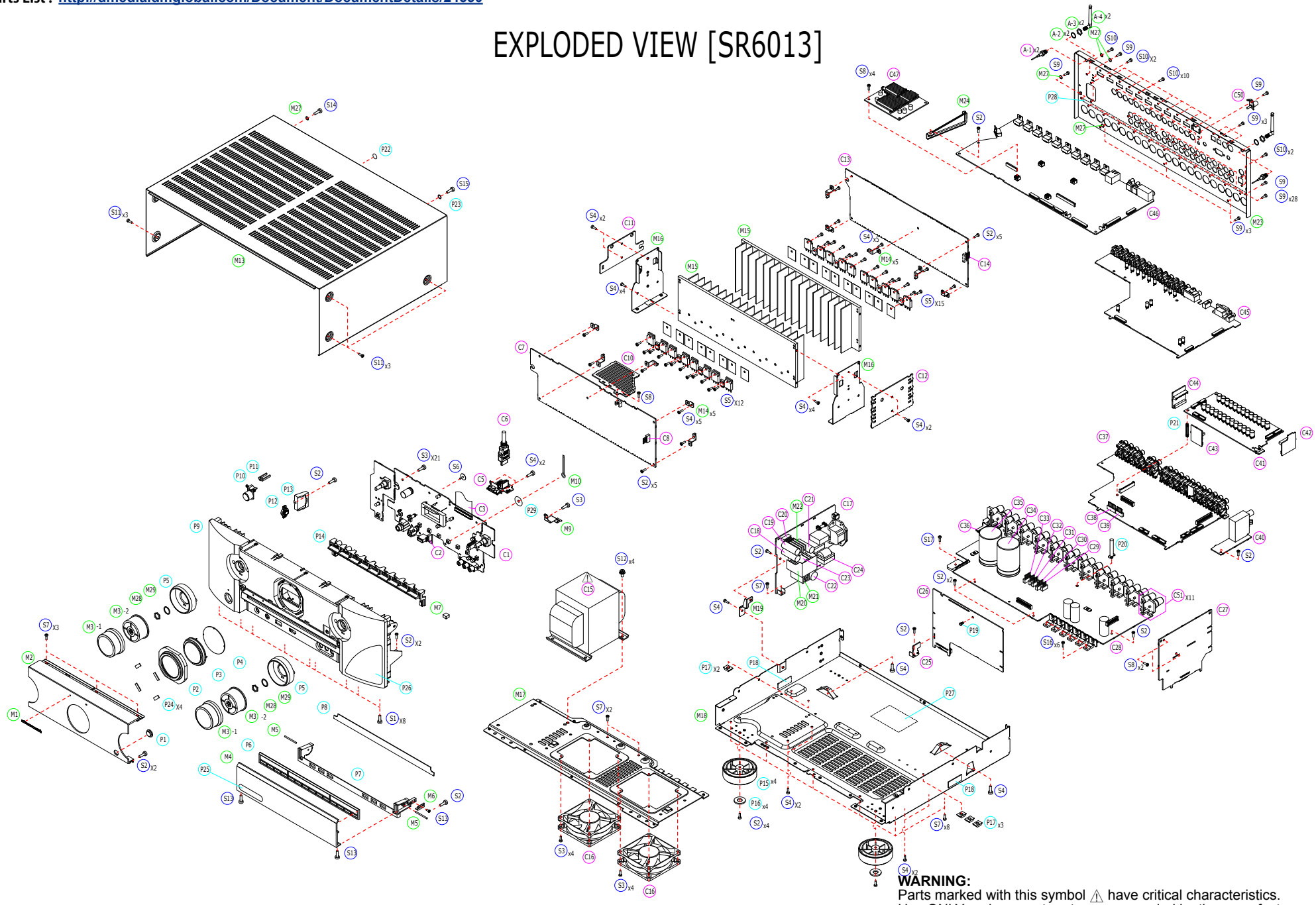

WARNING:
Parts marked with this symbol ⚠ have critical characteristics.
Use ONLY replacement parts recommended by the manufacturer.

PACKAGING VIEW

Parts List : http://dmedia.dmglobal.com/Document/DocumentDetails/24550

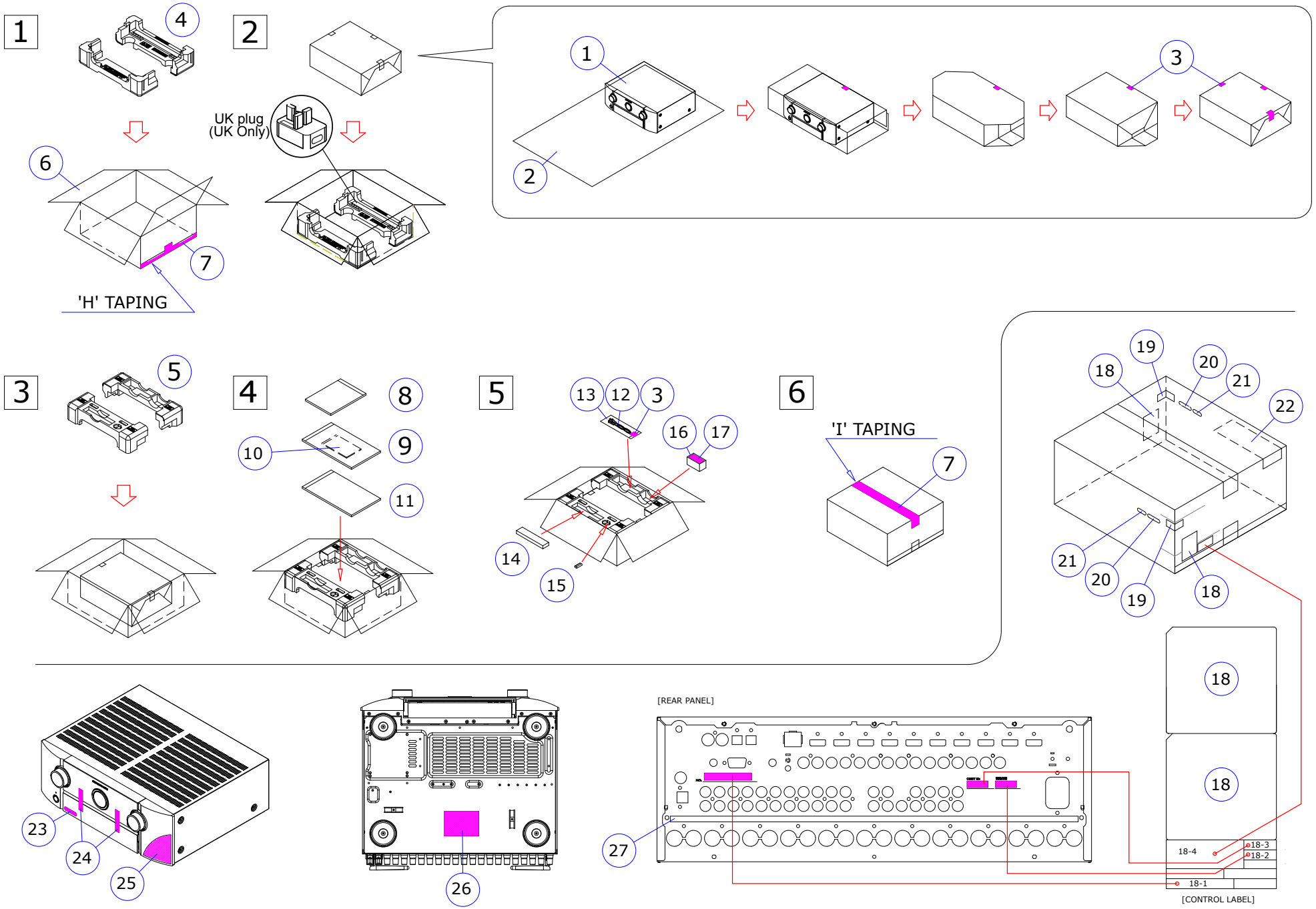

REPAIR INFORMATION

TROUBLE SHOOTING

1. POWER
2. Analog video
3. HDMI/DVI
4. AUDIO
5. Network / Bluetooth / USB
6. SMPS

PROTECTION DIAGRAM

AUDIO CHECK PATH

HDMI "Rx/Tx" Failure Detection

1. Prior checking
2. Preparations for checking HDMI Switcher reception/transmission register
3. Starting detecting the point of failure
4. Device implementation location

CLOCK FLOW & WAVE FORM IN DIGITAL BLOCK

SPECIAL MODE

Special mode setting button
1. Version Display Mode
2. PANEL / REMOTE LOCK Selection Mode
3-1. Selecting the Mode for Service-related
3-2. Protection History Display Mode
3-3. 232C Standby Clear Mode
3-4. Operation Info Mode
3-5. TUNER STEP mode (U / N only)
4. Protection Pass Mode
5. Network Initialization Mode
6. Clearing the Operation Info
7. Log Capture feature

DIAGNOSTIC MODE

Service Path Check Mode
DIAGNOSTIC PATH DIAGRAM

JIG FOR SERVICING

ADJUSTMENT

1. POWER

1.1. The unit does not power on

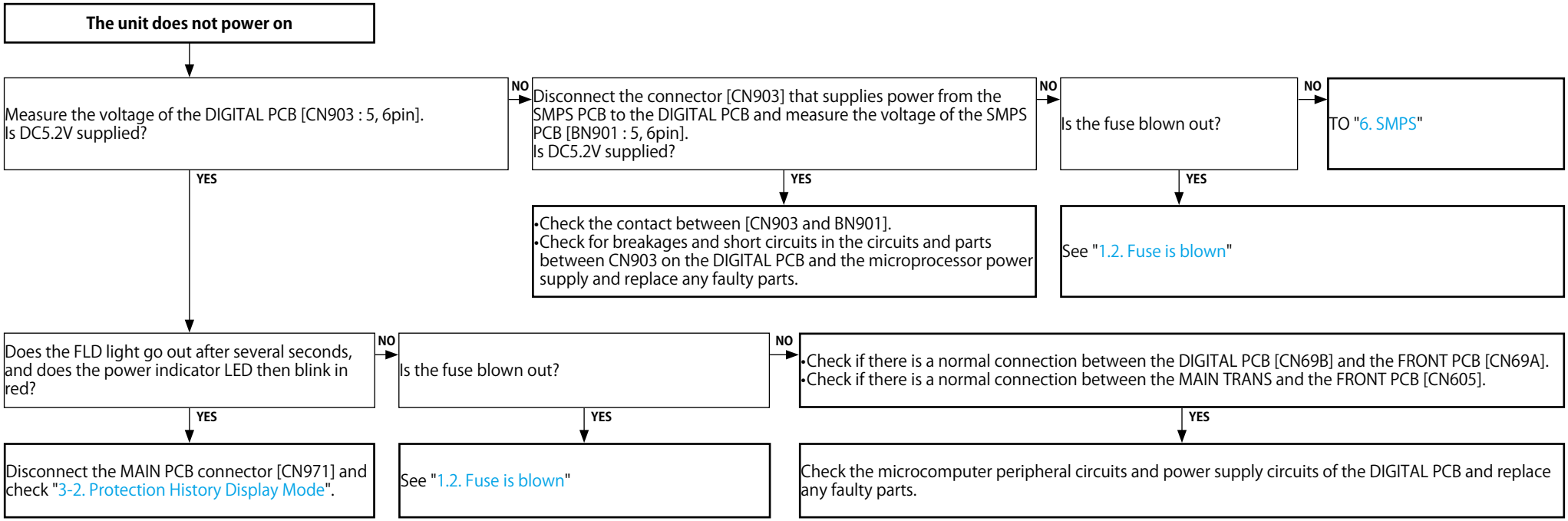

1.2. Fuse is blown

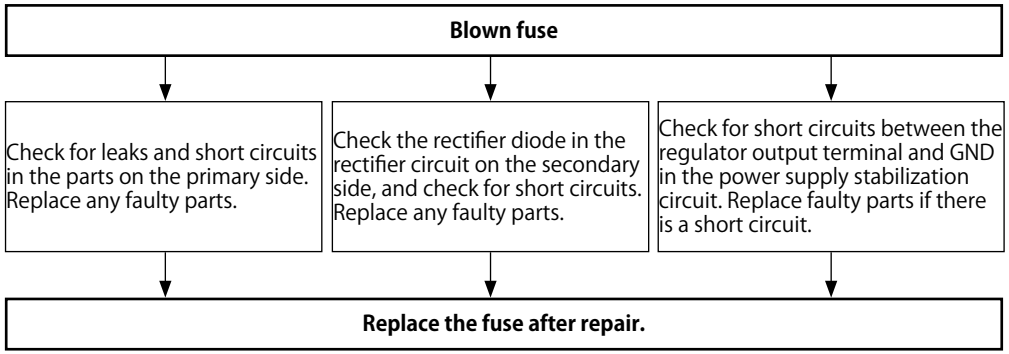

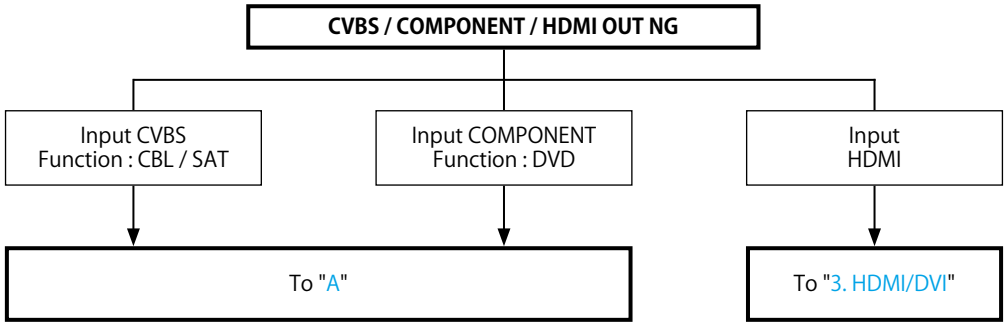

DIGITAL test point

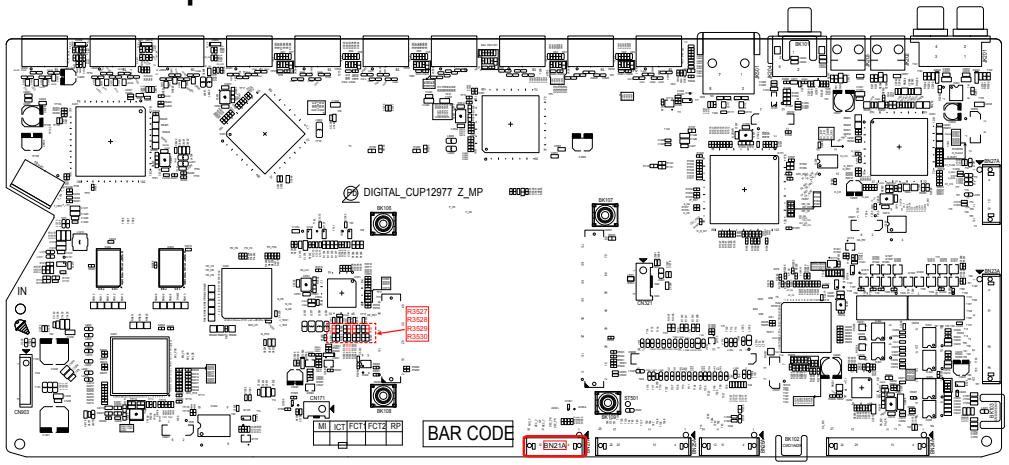

VIDEO test point

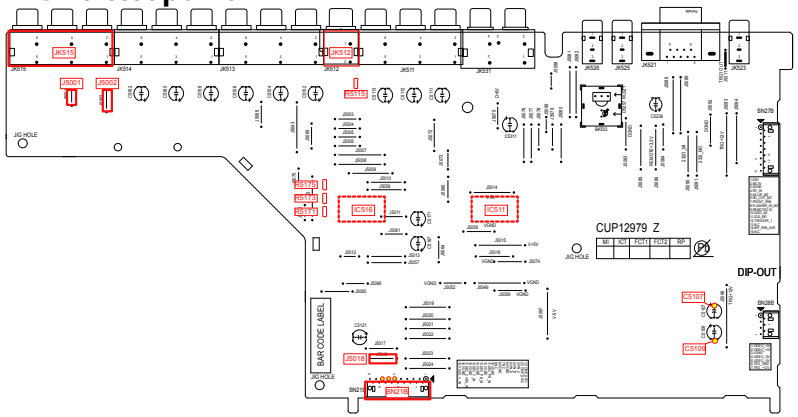

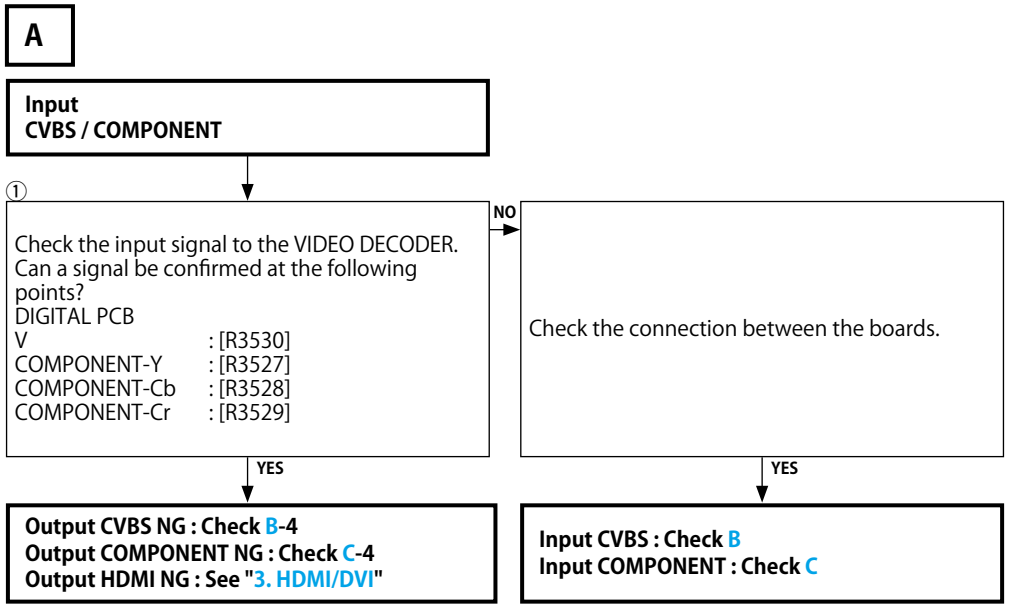

B

Input
CVBS

① Check the settings of each IC.
Are the following voltages set?
DIGITAL PCB
[BN21A : 1 pin] : Hi (3.3V)
[BN21A : 2 pin] : Hi (3.3V)
[BN21A : 3 pin] : Lo (0V)

NO → DIGITAL PCB faulty.

YES

② Extend the DIGITAL PCB using the jig.

③ Is the power voltage being output correctly?
V+5V : [C5107 : + side]
V-5V : [C5109 : - side]

NO → Check the connection between the SIDE CONNECTOR PCB and the VIDEO PCB.

NO → The regulator part of REG_SPK PCB is faulty.

YES

④ Is a signal being output from the video amplifier?
CVBS : [J5018] [R5115]

NO →
- Check the [IC511] power voltage and check the soldering of the surrounding circuits.
- The pattern between [IC511, JK512 and BN21B] is faulty.

YES

- Check the connection between the FRONT CONNECTOR PCB and the VIDEO PCB.
- Check the soldering of [BN21B] on the VIDEO PCB.
- Check the soldering of [BN21A] on the DIGITAL PCB.
- Check the soldering of [CN21A and CN21B] on the FRONT CONNECTOR PCB.

※ These instructions refer to the VIDEO PCB unless otherwise specified.

C

Input
COMPONENT

① Check the settings of each IC.
Are the following voltages set?
DIGITAL PCB
[BN21A : 5 pin] : Lo (0V)
[BN21A : 4 pin] : Hi (3.3V)

NO → DIGITAL PCB faulty.

YES

② Extend the DIGITAL PCB using the jig.

③ Is the power voltage being output correctly?
V+5V : [C5107 : + side]
V-5V : [C5109 : - side]

NO → Check the connection between the SIDE CONNECTOR PCB and the VIDEO PCB.

NO → The regulator part of REG_SPK PCB is faulty.

YES

④ Is a signal being output from the video amplifier?
COMP-Y : [BN21B : 15pin] [R5171]
COMP-CB : [BN21B : 13pin] [R5173]
COMP-CR : [BN21B : 11pin] [R5175]

NO →
- Check the [IC516] power voltage and check the soldering of the surrounding circuits.
- The pattern between [IC516, JK515 and BN21B] is faulty.

YES

- Check the connection between the FRONT CONNECTOR PCB and the VIDEO PCB.
- Check the soldering of [BN21B] on the VIDEO PCB.
- Check the soldering of [BN21A] on the DIGITAL PCB.
- Check the soldering of [CN21A and CN21B] on the FRONT CONNECTOR PCB.
- Check the soldering of [JK515(E3)] on the VIDEO PCB.

※ These instructions refer to the VIDEO PCB unless otherwise specified.

3. HDMI/DVI

3.1. No picture or sound is output (HDMI to HDMI)

No picture or sound is output.

↓

Check the connection of the HDMI/DVI cable.

↓

(1) Is the HDMI/DVI cable correctly inserted?
- NO → Check the connection of the HDMI/DVI cable.
- YES ↓

(2) Is an HDMI/DVI selector, repeater or image quality improvement device being used?
- YES → Remove all of these and connect only the HDMI/DVI cable.
- NO ↓

(3) Is a certified HDMI cable (with the HDMI mark) being used?
- NO → Use a certified HDMI cable (with the HDMI mark).
- YES ↓

(4) Is the HDMI/DVI cable shorter than 5m?
- NO → Replace the HDMI/DVI cable with the one shorter than 5m (2m is recommended) and check again.
- YES ↓

(5) When the input signal is Deep Color or 4K, are you using a "**High speed HDMI cable with Ethernet**" or "**High speed cable**" that bears the HDMI logo?
- NO → Use an "**High speed HDMI cable with Ethernet**" or "**High speed cable**" that comes with the HDMI logo.
- YES ↓

(6) Are a picture and sound output when a different HDMI/DVI cable is used?
- YES → **The HDMI/DVI cable is faulty.**
- NO ↓

Check the Blu-ray/DVD player.

↓

(7) Are the HDMI output settings of the Blu-ray/DVD player correct?
- NO → Check the instruction manual of the Blu-ray/DVD player and set the HDMI output correctly.
- YES ↓

(8) When using a MARANTZ Blu-ray/DVD player, is the "HDMI" indicator of the fluorescent display lit? Proceed to YES when using a Blu-ray/DVD player produced by other manufactures.
- NO ↓
- YES ↓

(9) Are a picture and sound output when the resolution of the Blu-ray/DVD player is changed?
- YES → Set the output resolution of the Blu-ray/DVD player to the resolution supported by the TV.
- NO ↓

(10) Is sound output from the speaker terminal of this unit when the power of the TV is turned off or the cable connecting the TV to this unit is removed?
- YES → The Blu-ray/DVD player may not support the HDCP repeater function. Refer to the manufacturer of the Blu-ray/DVD player.
- NO ↓

(11) Are a picture and sound output when a different Blu-ray/DVD player is used?
- YES → The Blu-ray/DVD player is faulty.
- NO ↓

Check the TV.

↓

(12) Does the TV support HDCP?
- NO → Use a TV that supports HDCP. Computer monitors cannot be used.
- YES ↓

(13) Does the TV support 1080P/4K?
- NO → If the TV does not support 1080P/4K, a picture cannot be output even if the Blu-ray/DVD player is set to 1080P/4K.
- YES ↓

(14) Is the TV input setting set to HDMI?
- NO → Check the instruction manual of the TV and check the input setting.
- YES ↓

Go to next page.

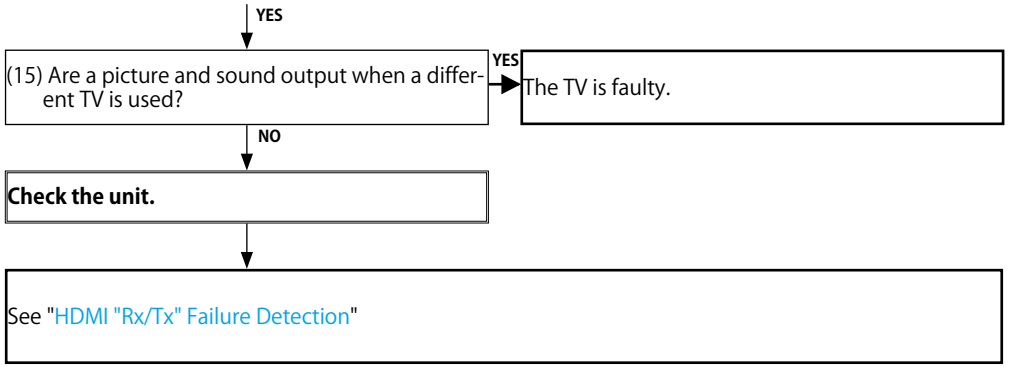
YES
(15) Are a picture and sound output when a different TV is used?
YES
The TV is faulty.
NO
Check the unit.
See "HDMI "Rx/Tx" Failure Detection"

4.1. AUDIO CHECK

No audio output

YES

CHECK 1	INPUT	SURROUND MODE	SOURCE
Audio output OK?	ANALOG 2CH	DIRECT	ANALOG

NO → Check the ANALOG AUDIO BLOCK

YES

CHECK 2	INPUT	SURROUND MODE	SOURCE
Audio output OK?	COAX or OPT	-	Legacy (PCM or DolbyDigital or dts···)

NO → Check the DIGITAL AUDIO BLOCK

YES

CHECK 3	INPUT	SURROUND MODE	SOURCE
Audio output OK?	ANALOG 2CH	MULTICH STEREO	ANALOG

NO → Check the ADC BLOCK

YES

CHECK 4	INPUT	SURROUND MODE	SOURCE
Audio output OK?	HDMI	-	Legacy (PCM2ch or DolbyDigital or dts···)

NO → Check the HDMI BLOCK

YES

CHECK 5	INPUT	SURROUND MODE	SOURCE
Audio output OK?	HDMI	-	HBR audio (DolbyTrueHD or dtsHD MA)

YES (DIGITAL AUDIO BLOCK is OK) → Check for other causes

NO

CHECK 6	INPUT	Connect	
AVR's (connected in HDMI) audio output OK?	HDMI	This unit's HDMI OUT → Other AVR's HDMI IN	
	Setting	SURROUND MODE	SOURCE
	CEC STANDBY	-	HBR audio(DolbyTrueHD or dtsHD MA)

YES → Check the DIGITAL AUDIO BLOCK

NO → Check the HDMI BLOCK

See "DIAGNOSTIC MODE"

4.2. Power AMP (AMP PCB)

When using the protection pass mode, do not connect speakers to the speaker terminals.

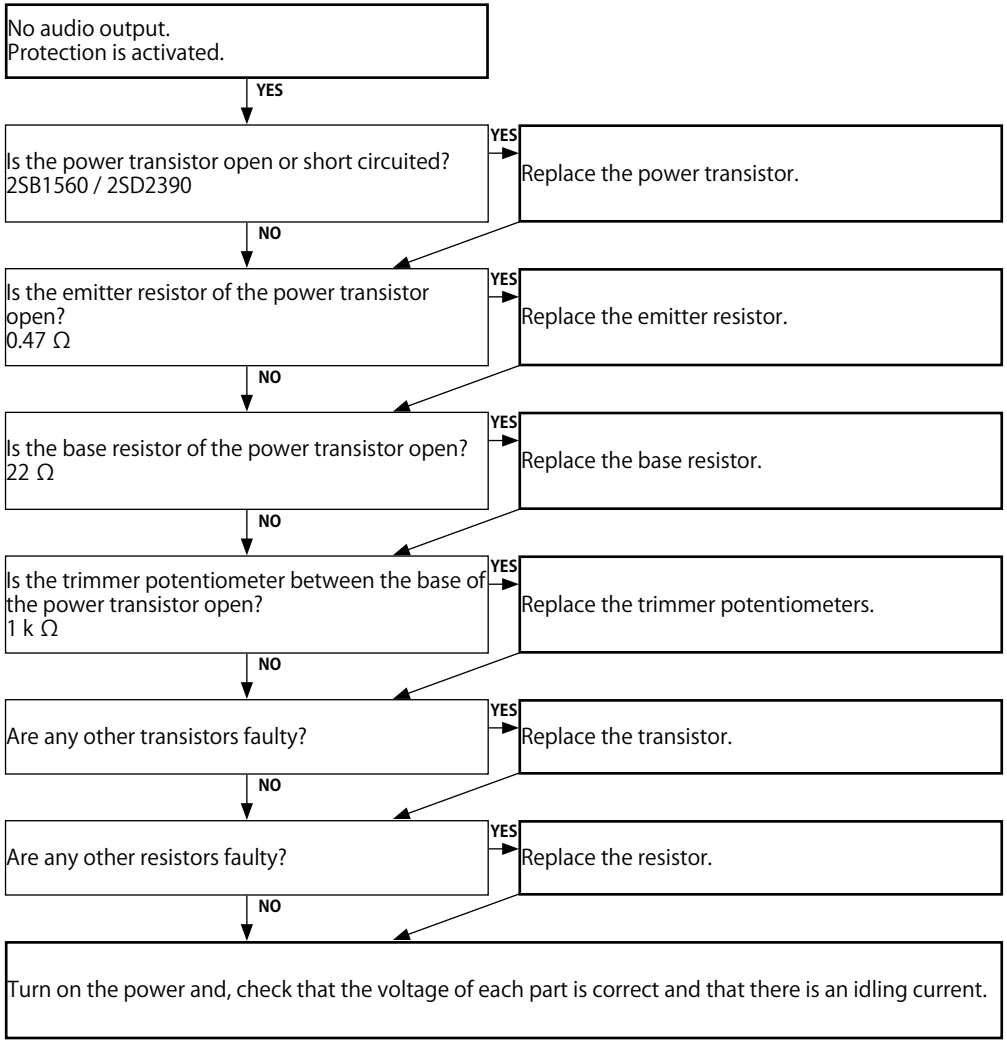

4.3. Analog audio

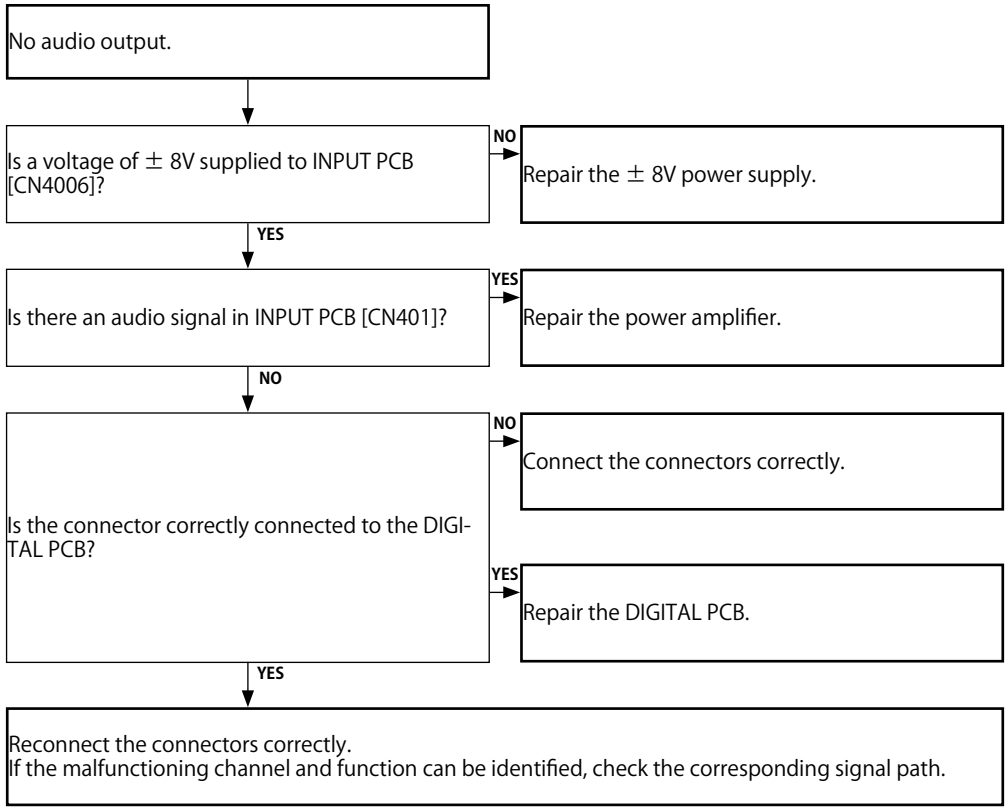

5.1. Cannot connect to the network

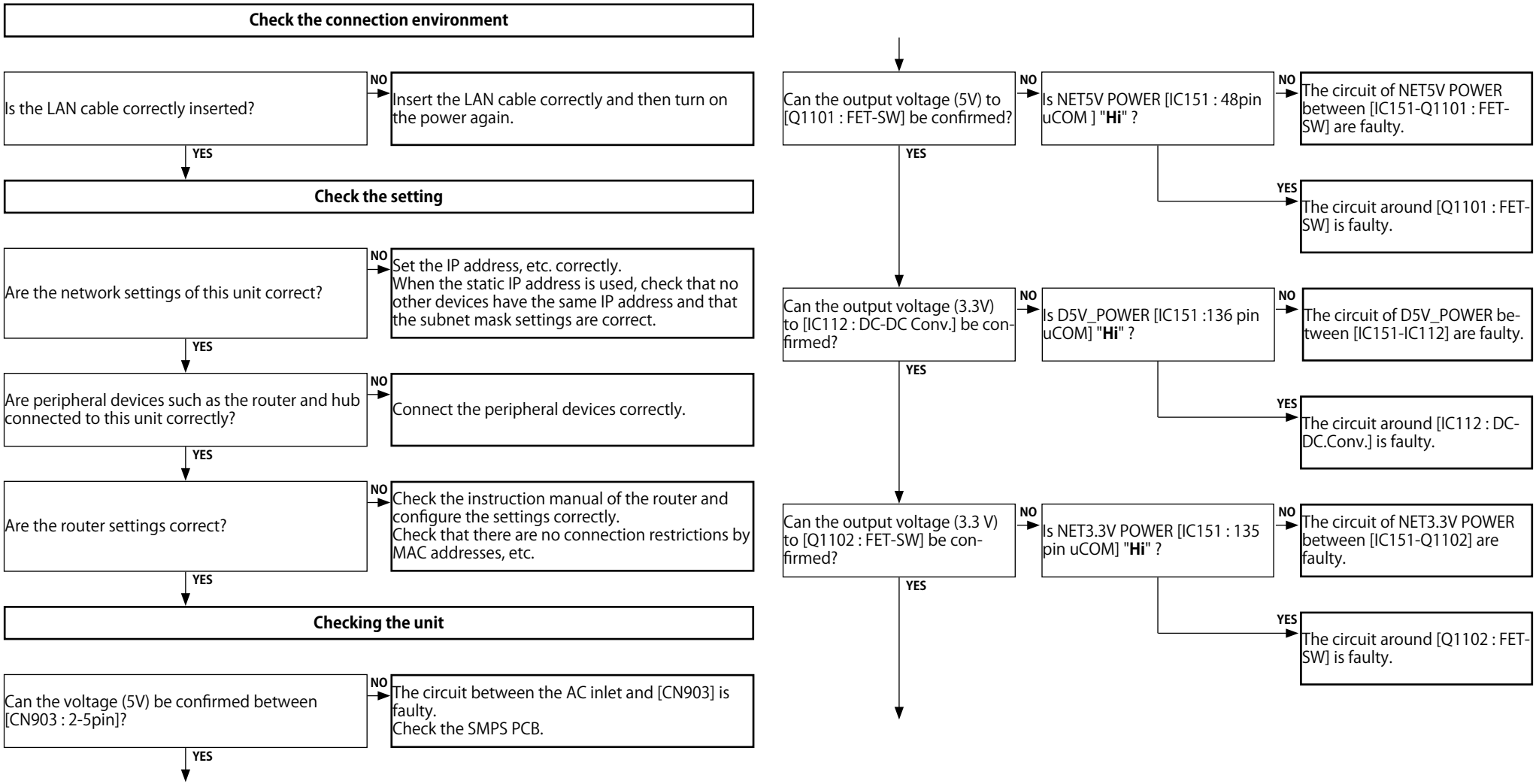

Go to next page.

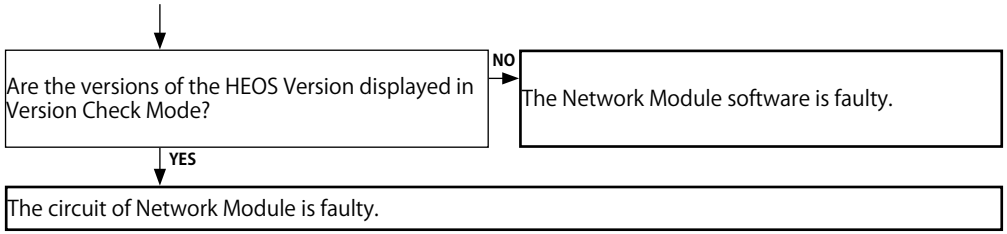

5.2. Cannot establish a Bluetooth connection

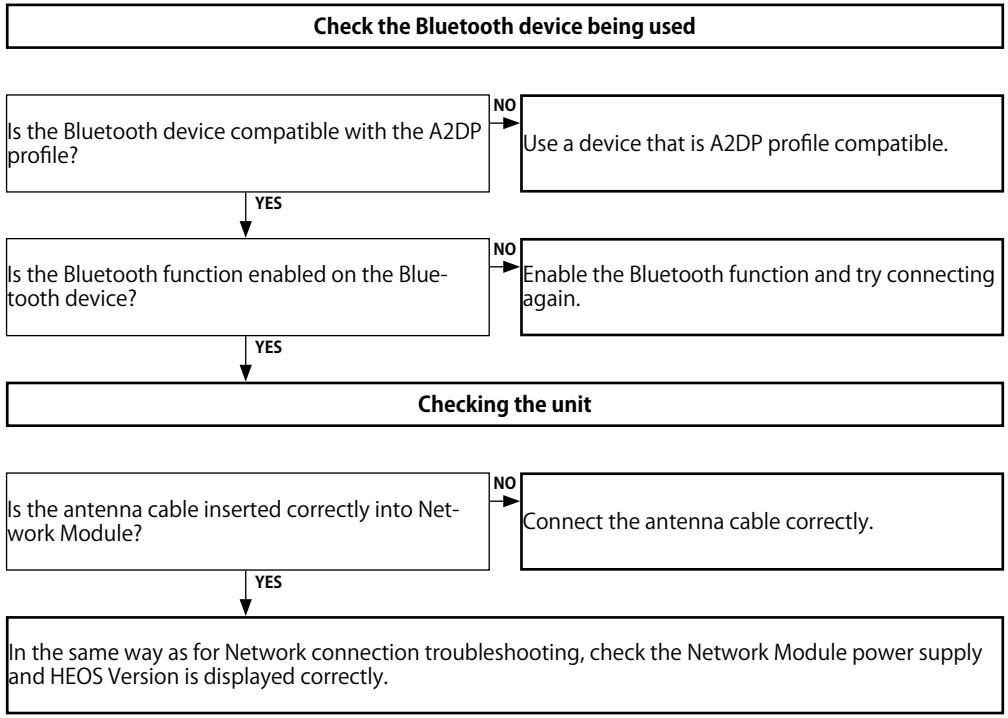

5.3. Cannot recognize the connected USB device

Check the USB device being used

Is a USB hub being used?
- YES → Do not use a USB hub.
- NO ↓

Is the USB device supported by this unit?
- NO → This unit supports devices in the FAT16- and FAT32-formatted mass storage class, MTP-compatible devices (except for some models).
- YES ↓

Checking the unit

Are [CN321] of the DIGITAL PCB and [BN605] of the FRONT PCB correctly connected?
- NO → Connect the connectors correctly.
- YES ↓

Can a voltage (5V) be confirmed between [JK601 : 1 - 4pin] (USB Connector) on FRONT PCB?
- NO → The circuit around [IC503] of the DIGITAL PCB is faulty.
- YES ↓

The USB signal circuit between Network Module and [JK601] of the FRONT PCB are faulty.

5.4. No picture or sound is output

Checking the unit (If no picture is output)

Are digital video signals(LEGOPCK, LEGOVS, LEGOHS, LEGODE, LEGOVD0-LEGOVD23) output from Network Module to [IC421 : V.PLD]?
- NO → The circuit around Network Module, [IC421 : V.PLD] is faulty.
- YES ↓

• Check the VIDEO circuit.

Checking the unit:(If no sound is output)

Are the I2S signal output to [CN501 : 7, 11, 13, 14pin] of the DIGITAL PCB ?
- NO → Network Module is faulty.
- YES ↓

Are audio signal output to Test point DI_F/FL on DIGITAL PCB.
- NO → The circuit around [IC221 : A.PLD] is faulty.
- YES ↓

Check the [IC251 : DSP] AUDIO circuit and the circuits thereafter.

DIGITAL test point

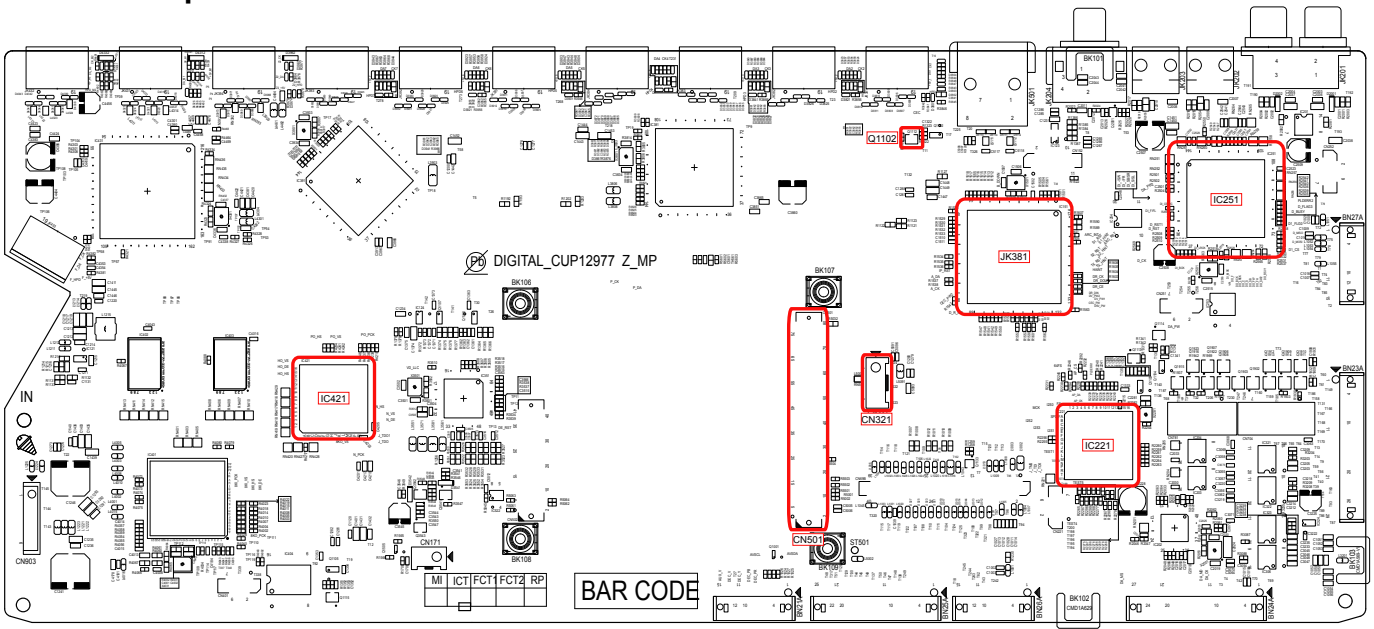

(A SIDE)

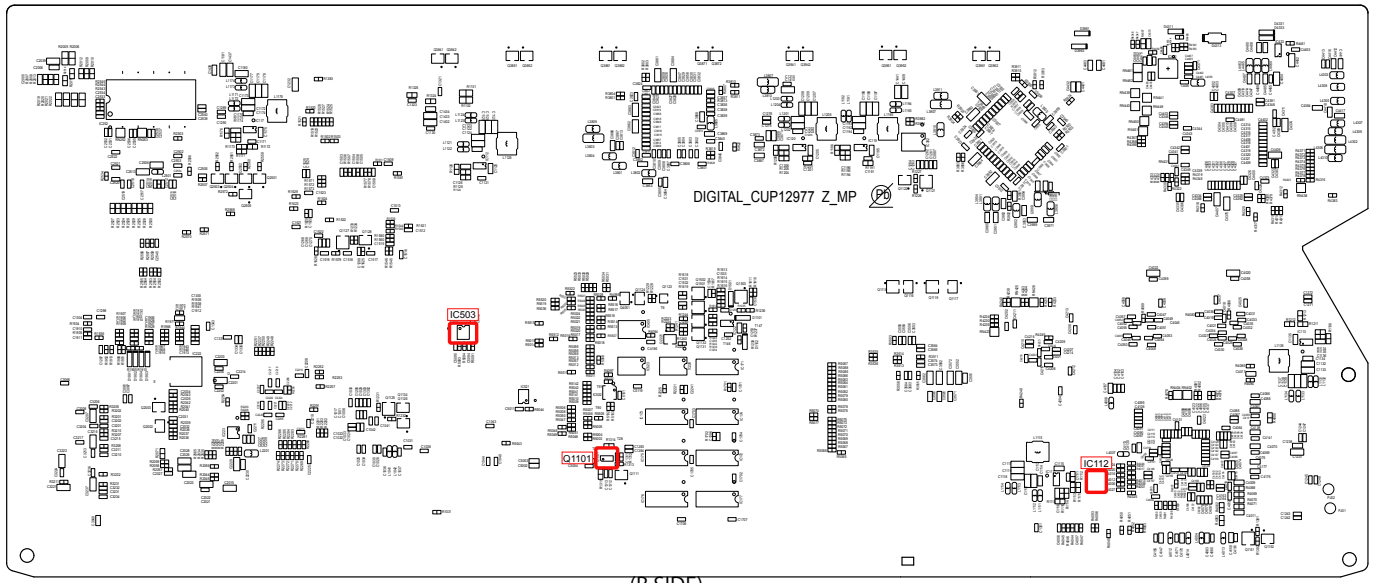

(B SIDE)

USB test point

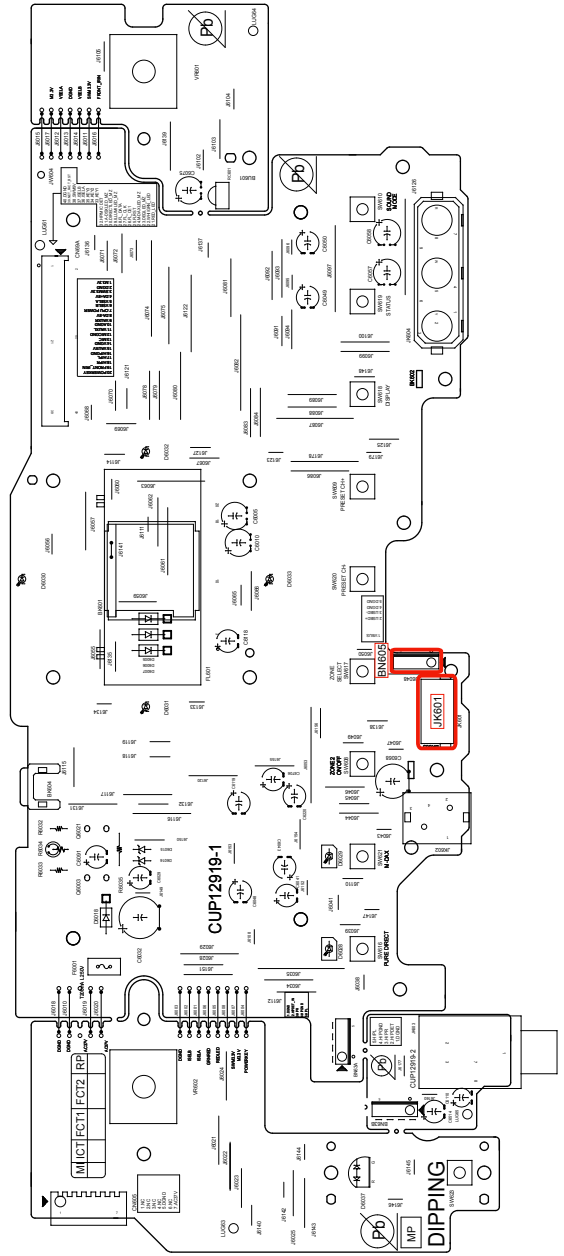

(A SIDE)

DC 5V is not output.

- Is [IC901 : TOP268EG] damaged?
  - YES → Replace the [IC901 : TOP268EG and D9001 / D9002 / D9003 / D9004].
  - NO ↓
- Is the fuse [F9001] functioning properly?
  - YES → Is [D9001 / D9002 / D9003 / D9004 / IC901] damaged?
    - YES → Replace the damaged part.
  - NO ↓
- Are there any short circuits caused by the soldering on the PCB?
  - YES → Repair the short circuited area on the PCB.
  - NO ↓
- Are any parts damaged?
  - YES → Check the damaged parts.
    - YES → Replace the damaged part.

Operation waveform for each part

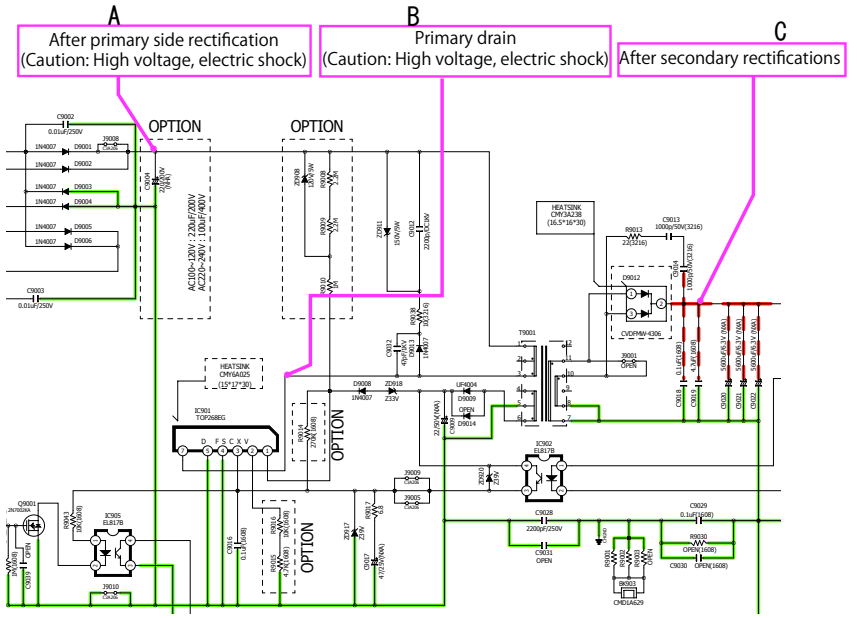

SMPS unit (Unloaded)

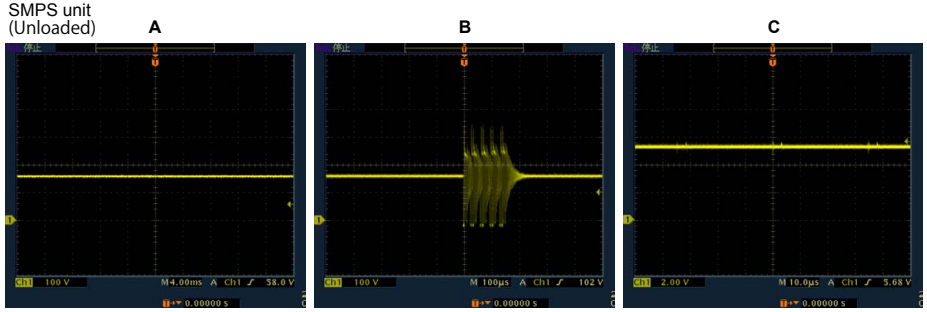

Set

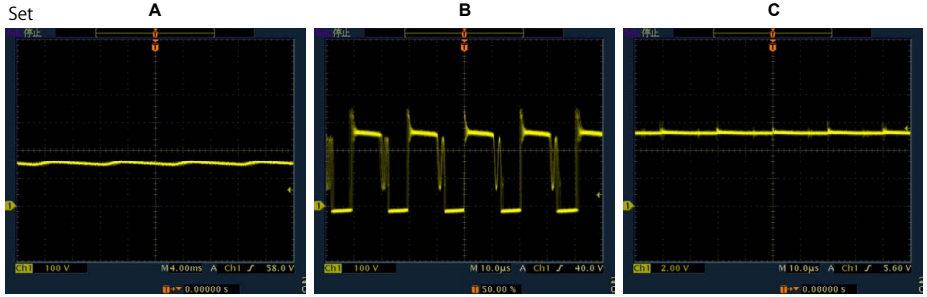

PROTECTION DIAGRAM

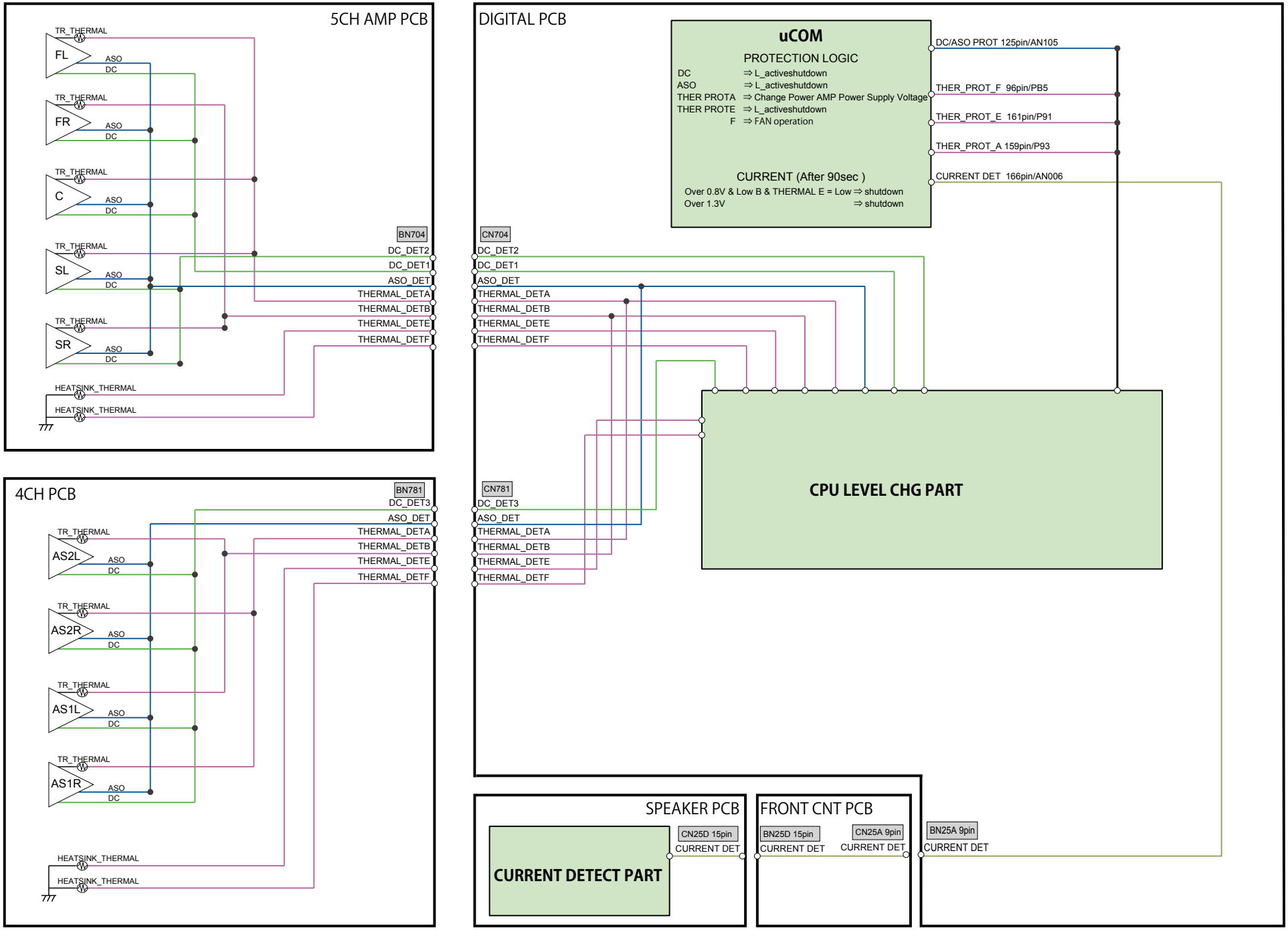

AUDIO CHECK PATH

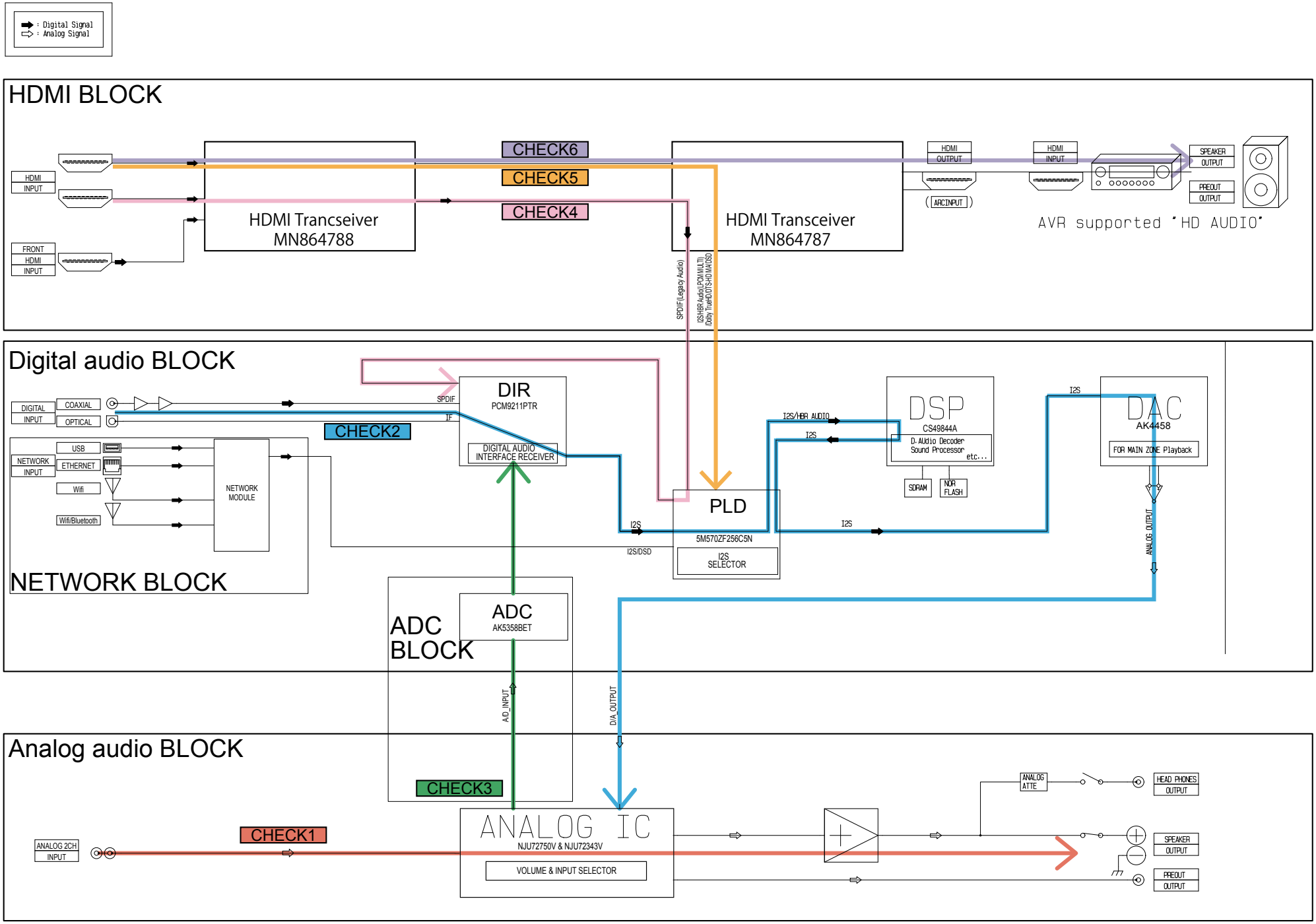

HDMI "Rx/Tx" Failure Detection

1. Prior checking

Check item(1.). Checking the HDMI connector
Checking the condition of the HDMI pin (rear/front).

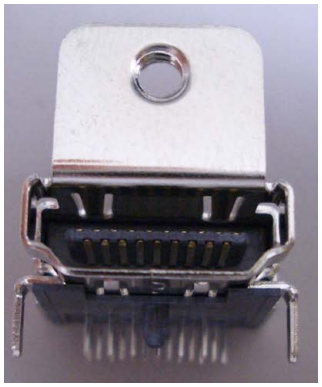

OK

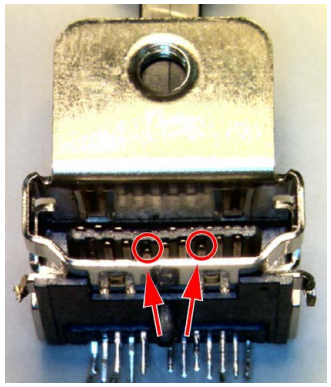

NG

Check for deformed pins.

There are deformed pins.

Replace the HDMI connector.

None of the pins are deformed.

Check by following the flow chart for "3. Starting detecting the point of failure".
NOTE :
After checking troubleshooting "3. HDMI/DVI", check "3. Starting detecting the point of failure".

2. Preparations for checking HDMI Switcher reception/transmission register

2-1. Necessary devices

1) Check the product settings.
2-a) Player with an HDMI terminal
2-b) TV with an HDMI terminal (* NOTE : Do not use a computer monitor.)
3) Windows PC
4) Serial communication software "**Termite.exe**"
(Download the software from http://www.compuphase.com/software_termite.htm and install it.)
5) HDMI cable
6) RS-232C Straight cable
7) oscilloscope

2-2. Device Connection Method

Connect the TV and the AVR to the player using an HDMI cable and connect the AVR to the PC through an RS-232C cable as shown in Figure 1.

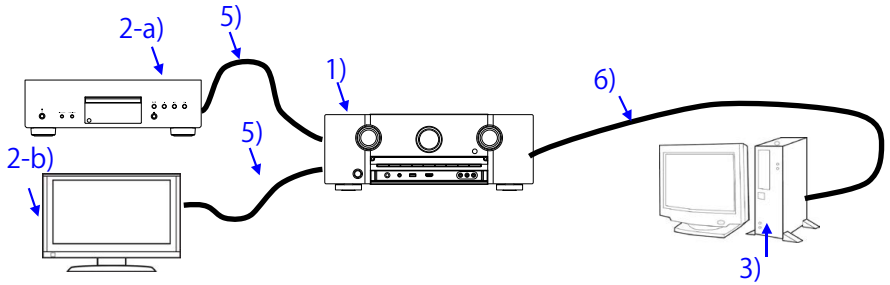

Figure 1. Device Connection Method

2-3. Device configuration method

PC settings : Execute the serial communication program, Termite.exe.

After executing Termite.exe, click [Settings].

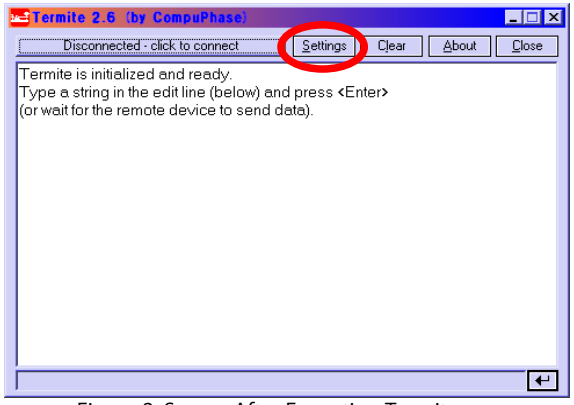

Figure 2. Screen After Executing Termite.exe

The serial port setup screen will be displayed.
Configure the settings as shown in Figure 3 and click the "**OK**" button.

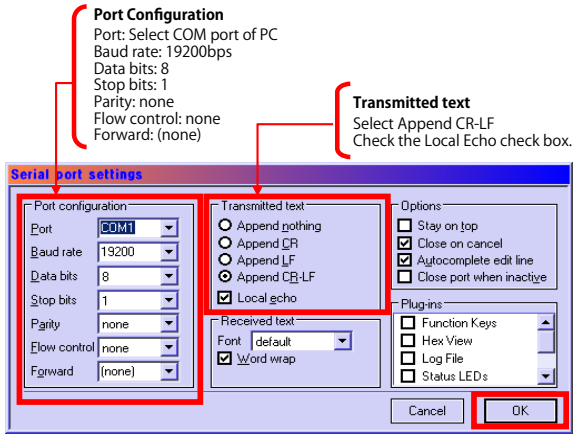

Figure 3. Serial Port Setup Screen

Click the [click to connect] button to start communication.
After a connection is established successfully, the display of the button name will change as shown in Figure 4.

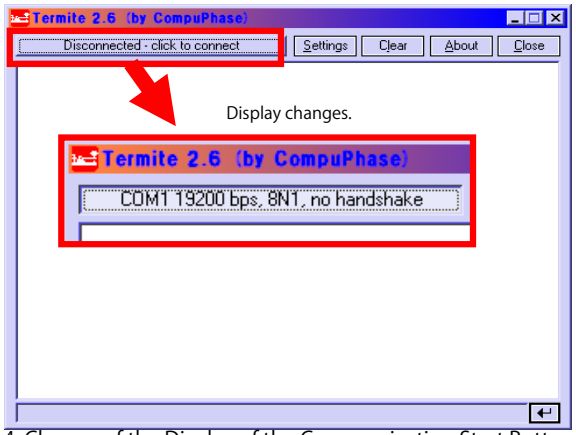

Figure 4. Change of the Display of the Communication Start Button Name

TV settings : Switch to the HDMI input in the AVR connection.
Player settings : Turn the unit power on and configure it to play disks.
AVR settings : While the power is On, hold down buttons "**DIMMER**" and "**STATUS**" for at least 3 seconds.
(Press and hold until the two indicator lights at the bottom right of the FLD blink.)
※ When the power is turned on after initialization, "**Setup Assistant**" will be displayed.
After exiting "**Setup Assistant**" execute the above.

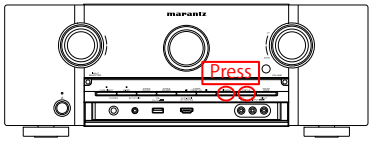

Figure 6. AVR settings

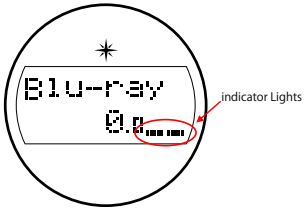

Figure 6. FLD Display When Set

When the settings are correct, the following message will be displayed in the window of Termite.
[00]Start Sub CPU Log Mode
****
(**** is a version of Sub CPU.)

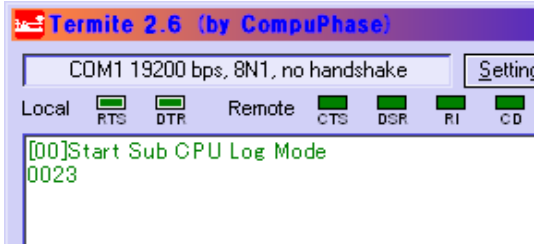

Figure 7. Display of Termite When AVR is Set

The setup is now complete.

Method for sending commands
Enter the command in the transmission command entry section, click the [Send] button and send the command.

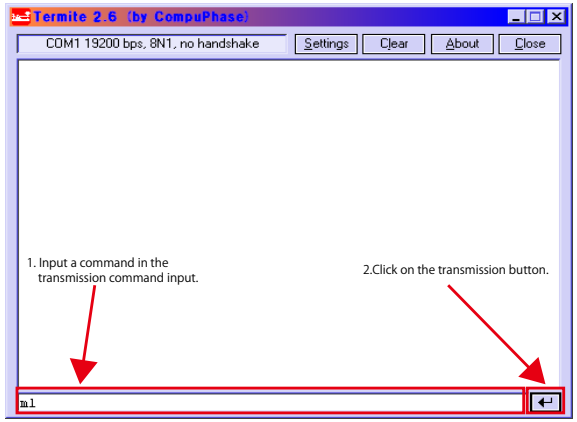

Figure 8. Method for Sending Termite Commands

3. Starting detecting the point of failure

Check item(3.1.).
Check the power supply status and communication status with the CPU of each device.
Start in HDMI Diagnostics mode and follow the procedures below.

(1) Start in HDMI Diagnostics mode

While the power is on, hold down buttons "**DIMMER**" and "**SOUND MODE**" for at least 3 seconds.

L1	HDMI
L2	DIAG

↓ "**HDMI DIAGNOSTICS**" is displayed.

When the mode has switched, start Hardware Check.

L1	Hardware
L2	Check...

↓

(2-1) Display when an Error Code is displayed.

L1	ErrH1-XX
L2	Contact support

L2 : Content of the display is scrolled.
Check the Error Code table items.

Error Code table

Error Code	Check item No.	Description	
H1-01	Check item (3-1.1.)	Communication Error with HDMI Tx	[IC431 : MN864787]
H1-02	Check item (3-2.1.)	Communication Error with HDMI SW1	[IC391 : MN864788]
H1-03	Check item (3-3.1.)	Communication Error with HDMI SW2	[IC381 : MN864788]
H1-05	Check item (3-7.1.)	Communication Error with VIDEO DECODER	[IC351 : ADV7180]
H1-06	Check item (3-4.1.)	Communication Error with GUI IC	[IC401 : ADV8003]
H1-08	Check item (3-8.1.)	Communication Error with DSP	[IC251 : CS49844A]
H1-12	Check item (3-9.1.)	Communication Error with DIR	[IC202 : PCM9211]
H1-14	Check item (3-5.1.)	DDR check Error	[IC402, IC403 : A3R12E40DBF-8E]
H1-15	Check item (3-6.1.)	Communication Error with GUI ROM	[IC404 : MX25L12835FMI-10G]
H1-16	Check item (3-10.1.)	Communication Error with ARC IC	[IC432 : SiI9437]

(2-2) Display when an Error is not detected.

L1	1 Auto
L2	Test

Cancel the mode, and proceed to check item (3.2.).

Canceling the selected mode
Press the power button to exit off the power.

Check item(3.2.). : Does a video signal come from HDMI ZONE2 OUT to TV correctly?

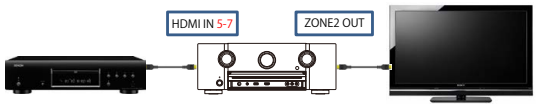

When the HDMI input terminal (HDMI 5, 6, 7) are connected in order to the player, are the audio and video from the player played back on the TV correctly in each case?

NO → Go to check item (3-11.1.) (Switcher1 failure detection procedure)

YES ↓

Check item(3.3.). : Does a video signal come from HDMI ZONE2 OUT to TV correctly?

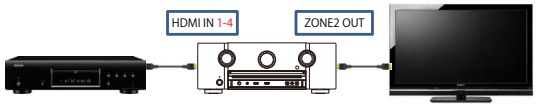

When the HDMI input terminal (HDMI 1, 2, 3, 4) are connected in order to the player, are the audio and video from the player played back on the TV correctly in each case?

NO → Go to check item (3-12.1.) (Switcher2 failure detection procedure)

YES ↓

Check item(3.4.). Does a video signal come from HDMI OUT to TV correctly?

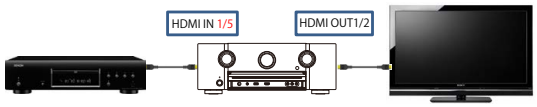

Turn Video Conversion "**OFF**" on the setup menu.
(SETUP MENU-> Video-> Output Settings-> Video Conversion = Off)
When the player is connected in order to the HDMI input terminals (HDMI 1, 5), in each case is the player video played back on the TV connected to the HDMI output terminal (HDMI OUT 1,2)?

NO → Go to check item (3-13.1.) (Tx failure detection procedure)

YES ↓

When the HDMI input terminal (AUX1) is connected to the player, the video from the player will be played back on the TV?
Use any of Dolby TrueHD/DTSHD MA/PCM 8ch for the playback audio format.

NO → Is the "**DIG**" indicator illuminated on the FLD?
When the "**DIG**" indicator is illuminated, the DIGITAL AUDIO block is faulty.
If the "**DIG**" indicator is not illuminated, go to check item (3-14.1.).
(HDMI DDC Buffer [TCA9517] failure detection procedure)

YES ↓

Check item(3.5.). Does a video signal come from HDMI OUT to TV correctly?

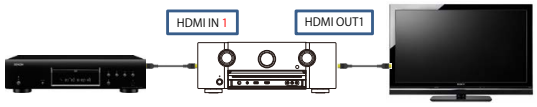

Turn Video Conversion "**ON**" on the setup menu.
(SETUP MENU-> Video-> Output Settings-> Video Conversion = On)
When the HDMI input terminal (HDMI 1) is connected to the player, the video from the player will be played back on the TV?

NO → Go to check item (3-15.1.) (GUI and PLD failure detection procedure)

YES ↓

There are no problems with the HDMI device.

3-1. Error Code H1-01 failure detection procedure

Checking device. [IC431 : MN864787]

↓

Check the power supply voltage. (HDMI Tx)

↓

Check item(3-1.1.). Check the power supply voltage. :
Does the power supply voltage of the HDMI Tx [IC431] indicate the correct voltage (1.1V, 3.3V)?
The test points are as follows.

HDMI Tx

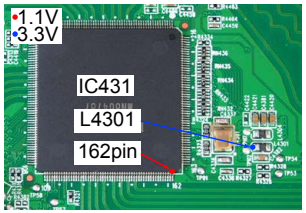

YES ↓

NO ↓

Check item(3-1.2.). Check the power supply voltage. :
Check the power components [IC121/IC113] and the pattern on the substrate.
If there is no problem, remove the HDMI Tx [IC431] from the sub-strate and measure the voltage at the test point of check item (3-1.1.).
Is the voltage correct (1.1V or 3.3V)?

YES ↓

Replace with a new device.

↓

NO ↓

The power supply circuit is faulty.
Replace the PCB.

↓

Recheck from check item (3.1).
If it does not work, replace the PCB.

Checking the reset waveform. (HDMI Tx)

↓

Check item(3-1.3.). Checking the reset waveform :
Check the waveform.
Is the "TP91" waveform of the TP near the HDMI Tx [IC431] correct (like the one shown in the diagram) when the power is turned on?

HDMI Tx

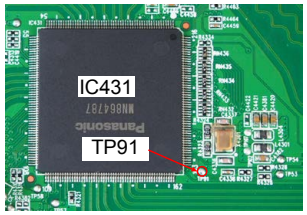

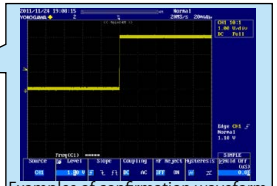

Examples of confirmation waveform
Voltage scale : 1.0V/div
Time scale : 20ms/div

NO →

Check the reset circuit between CPU [IC151] and HDMI Tx [IC431].
If there is no problem, the HDMI Tx [IC431] is faulty.
Replace with a new device.
Recheck from check item (3.1.)
If it does not work, replace the PCB.

YES ↓

Go to next page.

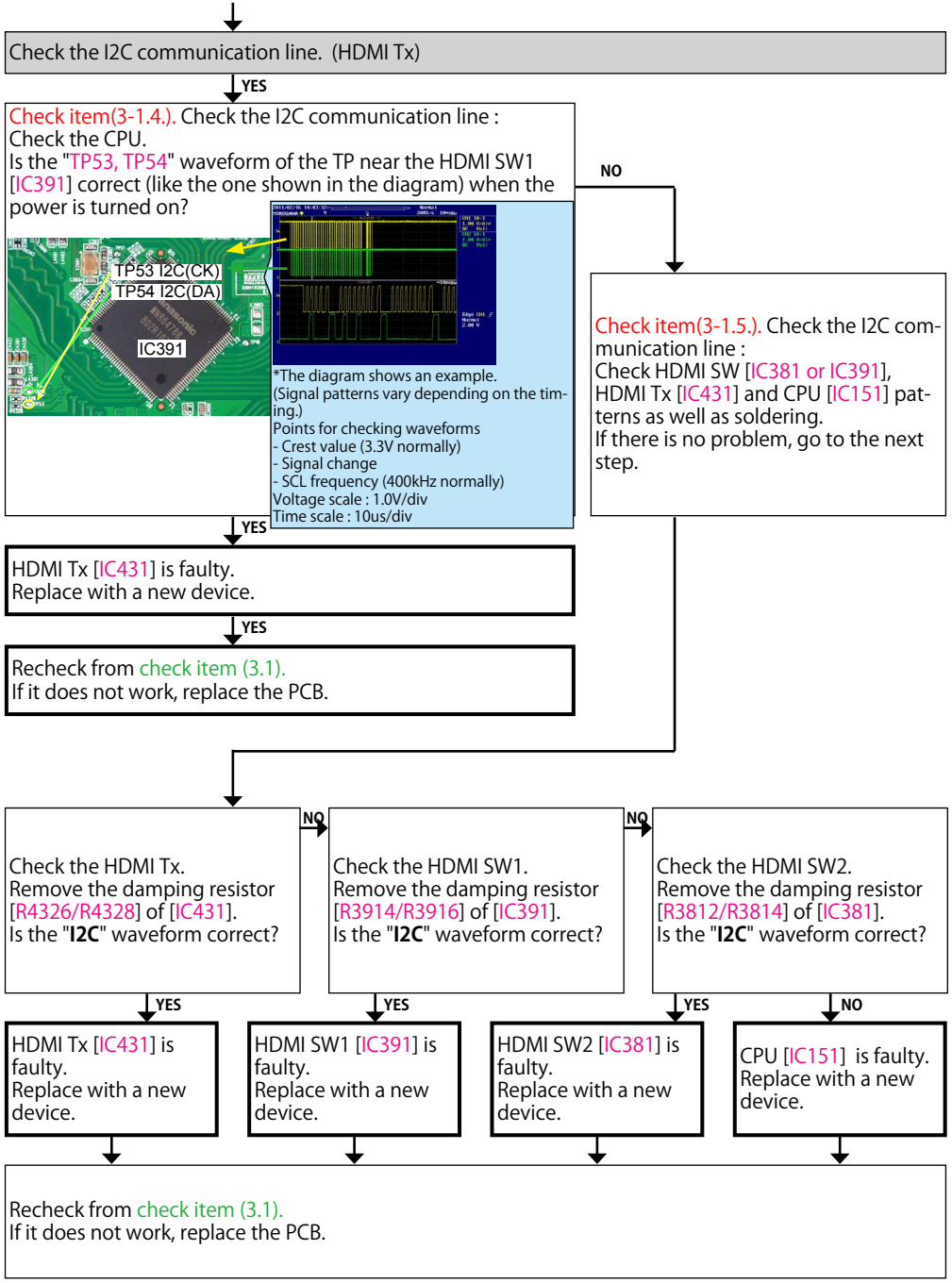
Check the I2C communication line. (HDMI Tx)
YES
Check item(3-1.4.). Check the I2C communication line :
Check the CPU.
Is the "TP53, TP54" waveform of the TP near the HDMI SW1 [IC391] correct (like the one shown in the diagram) when the power is turned on?
NO
TP53 I2C(CK)
TP54 I2C(DA)
IC391
*The diagram shows an example.
(Signal patterns vary depending on the timing.)
Points for checking waveforms
- Crest value (3.3V normally)
- Signal change
- SCL frequency (400kHz normally)
Voltage scale : 1.0V/div
Time scale : 10us/div
Check item(3-1.5.). Check the I2C communication line :
Check HDMI SW [IC381 or IC391], HDMI Tx [IC431] and CPU [IC151] patterns as well as soldering.
If there is no problem, go to the next step.
YES
HDMI Tx [IC431] is faulty.
Replace with a new device.
YES
Recheck from check item (3.1).
If it does not work, replace the PCB.
Check the HDMI Tx.
Remove the damping resistor [R4326/R4328] of [IC431].
Is the "I2C" waveform correct?
NO
Check the HDMI SW1.
Remove the damping resistor [R3914/R3916] of [IC391].
Is the "I2C" waveform correct?
NO
Check the HDMI SW2.
Remove the damping resistor [R3812/R3814] of [IC381].
Is the "I2C" waveform correct?
YES
HDMI Tx [IC431] is faulty.
Replace with a new device.
YES
HDMI SW1 [IC391] is faulty.
Replace with a new device.
YES
HDMI SW2 [IC381] is faulty.
Replace with a new device.
NO
CPU [IC151] is faulty.
Replace with a new device.
Recheck from check item (3.1).
If it does not work, replace the PCB.

3-2. Error Code H1-02 failure detection procedure

Checking device. [IC391 : MN864788]

↓

Check the power supply voltage. (HDMI SW1)

↓

Check item(3-2.1.). Check the power supply voltage. :
Does the power supply voltage of the HDMI SW1 [IC391] indicate the correct voltage (1.1V, 3.3V)?
The test points are as follows.

HDMI SW1

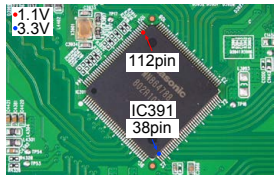

YES ↓

NO ↓

Check item(3-2.2.). Check the power supply voltage. :
Check the power components [IC119] and the pattern on the sub-strate.
If there is no problem, remove the HDMI SW1 [IC391] from the sub-strate and measure the voltage at the test point of check item (3-2.1.).
Is the voltage correct (1.1V or 3.3V)?

YES ↓

Replace with a new device.

↓

NO ↓

The power supply circuit is faulty.
Replace the PCB.

↓

Recheck from check item (3.1).
If it does not work, replace the PCB.

Checking the reset waveform. (HDMI SW1)

↓

Check item(3-2.3.). Checking the reset waveform :
Check the waveform.
Is the "TP17" waveform of the TP near the HDMI SW1 [IC391] correct (like the one shown in the diagram) when the power is turned on?

HDMI SW1

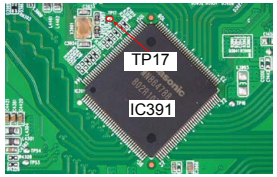

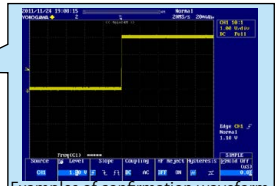

Examples of confirmation waveform
Voltage scale : 1.0V/div
Time scale : 20ms/div

NO →

Check the reset circuit between CPU [IC151] and HDMI SW1 [IC391].
If there is no problem, the HDMI SW1 [IC391] is faulty.
Replace with a new device.

↓

YES ↓

check item (3.1.) again after replacing [R3914/R3916] with a new resistor.
If there is still a problem, the HDMI SW1 [IC391] is faulty.
Replace with a new device.

↓

Recheck from check item (3.1).
If it does not work, replace the PCB.

3-3. Error Code H1-03 failure detection procedure

Checking device. [IC381 : MN864788]

Check the power supply voltage. (HDMI SW2)

Check item(3-3.1.). Check the power supply voltage. :
Does the power supply voltage of the HDMI SW2 [IC381] indicate the correct voltage (1.1V)?
The test points are as follows.

HDMI SW2

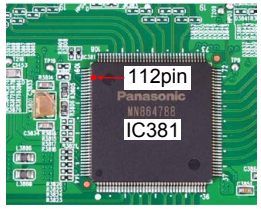

YES

NO

Check item(3-3.2.). Check the power supply voltage. :
Check the power components [IC120/IC113] and the pattern on the substrate.
If there is no problem, remove the HDMI SW2 [IC381] from the substrate and measure the voltage at the test point of check item (3-3.1.).
Is the voltage correct (1.1V or 3.3V)?

YES

Replace with a new device.

NO

The power supply circuit is faulty.
Replace the PCB.

Recheck from check item (3.1).
If it does not work, replace the PCB.

Checking the reset waveform. (HDMI SW2)

Check item(3-3.3.). Checking the reset waveform :
Check the waveform.
Is the "TP19" waveform of the TP near the HDMI SW2 [IC381] correct (like the one shown in the diagram) when the power is turned on?

HDMI SW2

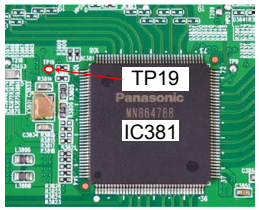

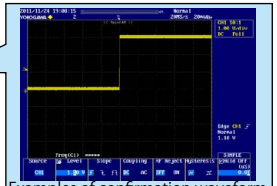

Examples of confirmation waveform
Voltage scale : 1.0V/div
Time scale : 20ms/div

NO

Check the reset circuit between CPU [IC151] and HDMI SW2 [IC381].
If there is no problem, the HDMI SW2 [IC381] is faulty.
Replace with a new device.
Recheck from check item (3-3.3.)
If it does not work, replace the PCB.

YES

check item (3.1.) again after replacing [R3812/R3814] with a new resistor.
If there is still a problem, the HDMI SW2 [IC381] is faulty.
Replace with a new device.

Recheck from check item (3.1).
If it does not work, replace the PCB.

3-4. Error Code H1-06 failure detection procedure

Checking device. [IC401 : ADV8003]

Check the power supply voltage.

Check item(3-4.1.). Check the power supply voltage. :
Does the power supply voltage of the GUI [IC401] indicate the appropriate voltage (1.8V, 3.3V)?
The test points are as follows.

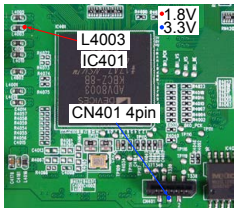

NO

Check item(3-4.2.). Check the power supply voltage. :
Check the power supply components [IC111, Q1105] on the substrate and peripheral pattern.
If there is no problem, remove the GUI [IC401] from the substrate and measure the voltage at the test point of check item (3-4.1.).
Is the voltage correct (1.8V or 3.3V)?

YES

NO

The power supply circuit is faulty.
Replace the PCB.

YES

GUI [IC401] is faulty.
Replace with a new device.

Recheck from check item (3.1).
If it does not work, replace the PCB.

Checking the reset waveform.

Check item(3-4.3.). Checking the reset :
Check the CPU.
Is the waveform of the TP near the GUI [IC401] correct (like the one shown in the diagram) when the power is turned on?

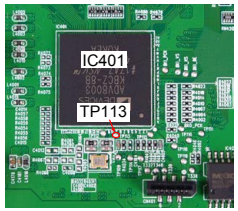

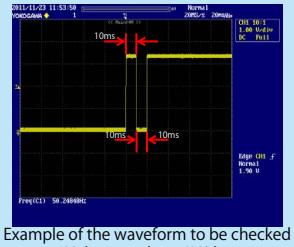

Example of the waveform to be checked
Voltage scale : 1.0V/div
Time scale : 20ms/div

YES

NO

Check the reset circuit between CPU [IC151] and GUI [IC401].
If there is no problem, the GUI [IC401] is faulty.
Replace with a new device.

Recheck from check item (3.1).
If it does not work, replace the PCB.

Go to next page.

Check the I2C communication line.

YES

Check item(3-4.4.). Check the I2C communication line :
Check the CPU.
Is the "**I2C**" waveform of the TP near the CPU [IC151] correct (like the one shown in the diagram) when the power is turned on?

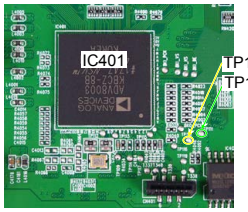

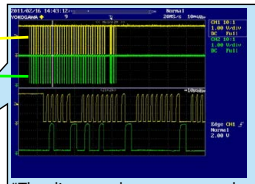

*The diagram shows an example.
(Signal patterns vary depending on the timing.)
Points for checking waveforms
- Crest value (3.3V normally)
- Signal change
- SCL frequency (400kHz normally)
Voltage scale : 1.0V/div
Time scale : 10us/div

YES

NO

Check item(3-4.5.). Check the I2C communication line :
Check GUI [IC401], VIDEO Decoder [IC351] and FET [Q1505] patterns as well as soldering.
If there is no problem, go to the next step.

Check the I2C communication line again after replacing the FET [Q1505].
If there is still a problem, the GUI [IC401] is faulty.
Replace with a new device.

GUI [IC401] is faulty.
Replace with a new device.

Recheck from check item (3.1.).
If it does not work, replace the PCB.

3-5. Error Code H1-14 failure detection procedure

Checking device. [IC402, IC403 : A3R12E40DBF-8E]

Check item(3-5.1.).
Check soldering of IP SCALER [IC401], DDR2 [IC402/IC403] and its peripheral circuits.
Check soldering of the resistors [R4076 to R4082, RN401 to RN415] between IP SCALER and DDR2.
If there is no problem with soldering, [IC401/IC402/IC403] is defective. Replace their IC. Or replace the substrate.

↓

Recheck from check item (3.1.).

3-6. Error Code H1-15 failure detection procedure

Checking device. [IC404 : MX25L12835FMI-10G]

↓

Check item(3-6.1.).
Write to the GUI ROM.

Recheck from check item (3.1.)
Does Error Code H1-15 continue?

NO

YES

↓

Check item(3-6.2.).
Replace [IC403] with a new device.

Recheck from check item (3.1.)
Does Error Code H1-15 continue?

NO

YES

↓

Go to check item (3-4.1.)

Recheck from check item (3.2.).

3-7. Error Code H1-05 failure detection procedure

Checking device. [IC351 : ADV7180]

↓

Checking the reset waveform. (VIDEO DECODER)

↓

Check item(3-7.1.). Checking the reset waveform :
Check the waveform.
Is the "TP13" waveform of the TP near the VIDEO DECODER [IC351] correct (like the one shown in the diagram) when the power is turned on?

VIDEO DECODER

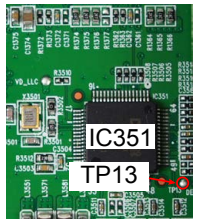

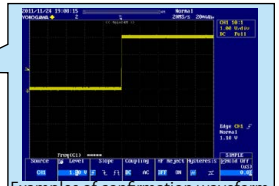

Examples of confirmation waveform
Voltage scale : 1.0V/div
Time scale : 20ms/div

NO →

Check the reset circuit between CPU [IC151] and VIDEO DECODER [IC351].
If there is no problem, the VIDEO DECODER [IC351] is faulty.
Replace with a new device.
Recheck from check item (3-7.1.)
If it does not work, replace the PCB.

YES

↓

check item (3.1.) again after replacing [R3537/R3538] with a new resistor.
If there is still a problem, the VIDEO DECODER [IC351] is faulty.
Replace with a new device.

↓

Recheck from check item (3.1.).
If it does not work, replace the PCB.

3-8. Error Code H1-08 failure detection procedure

Checking device. [IC251 : CS49844A]

Check the power supply voltage. (DSP)

Check item(3-8.1.). Check the power supply voltage. :
Does the power supply voltage of the DSP [IC251] indicate the appropriate voltage (1.0V, 3.3V)?
The test points are as follows.

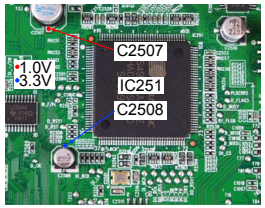

NO

Check item(3-8.2.). Check the power supply voltage. :
Check the power supply components [IC112, Q1103, IC117] on the substrate and peripheral pattern.
If there is no problem, remove the DSP [IC251] from the substrate and measure the voltage at the test point of check item (3-8.1.).
Is the voltage correct (1.0V or 3.3V)?

YES

NO

The power supply circuit is faulty.
Replace the PCB.

YES

DSP [IC251] is faulty.
Replace with a new device.

Recheck from check item (3.1.).
If it does not work, replace the PCB.

Checking the reset waveform. (DSP)

Check item(3-8.3.). Checking the reset :
Check the CPU.
Is the waveform of the TP near the DSP [IC251] correct (like the one shown in the diagram) when the power is turned on?

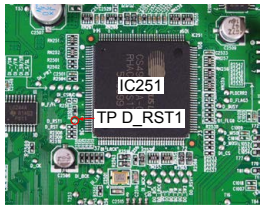

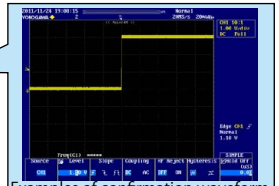

Examples of confirmation waveform
Voltage scale : 1.0V/div
Time scale : 20ms/div

YES

NO

Check the reset circuit between CPU [IC151] and DSP [IC251].
If there is no problem, the DSP [IC251] is faulty.
Replace with a new device.

Recheck from check item (3.1.).
If it does not work, replace the PCB.

Go to next page.

Check the SPI communication line. (DSP)

YES

Check item(3-8.4.). Check the SPI communication line :
Check the CPU.
Is the "**SPI**" waveform of the TP near the DSP [IC251] correct (like the one shown in the diagram) when the power is turned on?

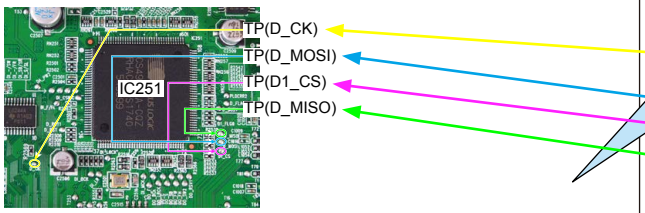

*The diagram shows an example.
(Signal patterns vary depending on the timing.)
Points for checking waveforms
- Crest value (3.3V normally)
- Signal change
- CLOCK frequency (about 1.2MHz)
Voltage scale : 2.0V/div
Time scale : 2us/div

YES

NO

Check item(3-8.5.). Check the SPI communication line :
Check DSP [IC251], CPU[IC151] patterns as well as soldering.
If there is no problem, go to the next step.

DSP [IC251] is faulty.
Replace with a new device.

Recheck from check item (3.1.).
If it does not work, replace the PCB.

3-9. Error Code H1-12 failure detection procedure

Checking device. [IC202 : PCM9211]

↓

Checking the reset waveform. (DIR)

↓

Check item(3-9.1.). Checking the reset :
Check the CPU.
Is the waveform of the TP near the DIR [IC202] correct (like the one shown in the diagram) when the power is turned on?

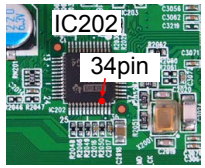

Examples of confirmation waveform
Voltage scale : 1.0V/div
Time scale : 20ms/div

YES

NO

Check the reset circuit between CPU [IC151] and DIR [IC202].
If there is no problem, the DIR [IC202] is faulty.
Replace with a new device.

↓

Recheck from check item (3.1.).
If it does not work, replace the PCB.

Check the communication line. (DIR)

YES

Check item(3-9.2.). Check the communication line :
Check the CPU.
Is the waveform of the TP near the DIR [IC202] correct (like the one shown in the diagram) when the power is turned on?

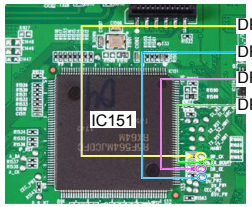

*The diagram shows an example.
(Signal patterns vary depending on the timing.)
Points for checking waveforms
- Crest value (3.3V normally)
- Signal change
- CLOCK frequency (about 2MHz)
Voltage scale : 2.0V/div
Time scale : 2us/div

YES

NO

Check item(3-9.3.). Check the communication line :
Check DIR [IC202], CPU[IC151] patterns as well as soldering.
If there is no problem, go to the next step.

DIR [IC202] is faulty.
Replace with a new device.

↓

Recheck from check item (3.1.).
If it does not work, replace the PCB.

3-10. Error Code H1-16 failure detection procedure

Checking device. [IC432 : SiI9437]

↓

Check the power supply voltage. (ARC IC)

↓

Check item(3-10.1.). Check the power supply voltage. :
Does the power supply voltage of the ARC IC [IC432] indicate the correct voltage (1.21V)?
The test points are as follows.

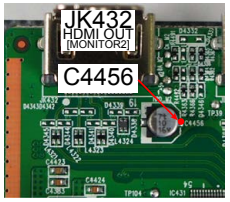

YES ↓ NO

Check item(3-10.2.). Check the power supply voltage. :
Check the power components [IC433] and the pattern on the sub-strate.
If there is no problem, remove the ARC IC [IC432] from the substrate and measure the voltage at the test point of check item (3-10.1.).
Is the power supply voltage correct (1.2V)?

YES ↓ NO

Replace with a new device.

The power supply circuit is faulty.
Replace the PCB.

Recheck from check item (3.1.).
If it does not work, replace the PCB.

Checking the reset waveform. (ARC IC)

↓

Check item(3-10.3.). Checking the reset waveform :
Check the waveform.
Is the "RESET" waveform of the ARC IC [IC432] correct (like the one shown in the diagram) when the power is turned on?

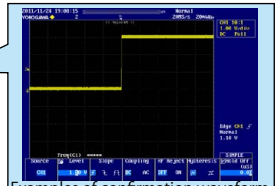

Examples of confirmation waveform
Voltage scale : 1.0V/div
Time scale : 20ms/div

NO

Check the reset circuit between CPU [IC151] and ARC IC [IC432].
If there is no problem, the ARC IC [IC432] is faulty.
Replace with a new device.

YES

ARC IC [IC432] is faulty.
Replace with a new device.

Recheck from check item (3.1.).
If it does not work, replace the PCB.

3-11. Switcher1 failure detection procedure

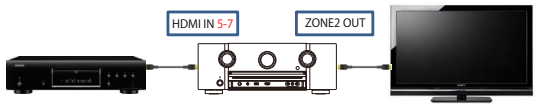

※ In order to check, connect the player to the HDMI terminal and configure the player as AVR source.
Next, turn on the power for the player and TV and start playback on the player.

Checking the +5V/DDC status register (HDMI Switcher1)

Check item(3-11.1.). Checking the 5V status register :
Send the following command from Termite.exe.

Send the command "i 002E 00FF 0001".

Case of IN5
Is the return value "C4 or C0" ?
(IN6 : "A2 or A0", IN7 : "91 or 90")

Example

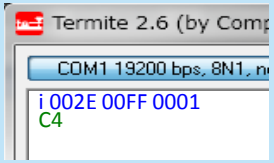

YES

NO

Go to check item (3-11.3.)

Check item(3-11.2.). Checking the DDC status register :
Send the following command from Termite.exe.

Case of IN5
Send the command "i 002B 0084 0001".
Case of IN6
Send the command "i 002B 0054 0001".
Case of IN7
Send the command "i 002B 0024 0001".

Move to the branch destination according to the value returned.

Example

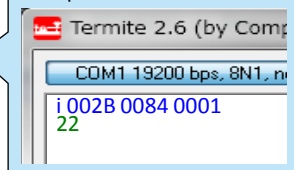

"00 or 04"
(Detection of DDC is not OK.)

Go to check item (3-11.4.)

"22 or 11"
(Detection of DDC is OK)

Go to check item (3-11.5.)

When the results of check item (3-11.1.) are "NO"
(Detection of 5V is not OK)

↓

Check the +5V voltage. (HDMI IN5 - 7)

↓

Check item(3-11.3.). Check the +5V voltage.
Does the test point near HDMI input terminal [JK391/JK392/JK393] indicate 5V?

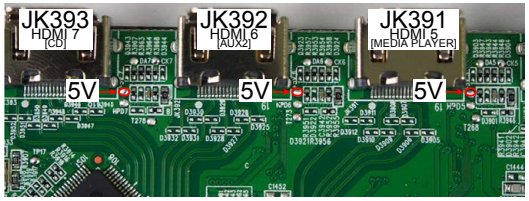

↓ YES

HDMI Switcher1 [IC391] is faulty.
Replace with a new device.

↓

Recheck from check item (3.2.).
If it does not work, replace the PCB.

↓ NO

Check for a short circuit in the 5 V line and the 5 V Switch IC [IC392].
If there is no problem, the HDMI Switcher1 [IC391] or the 5 V Switch IC [IC392] is faulty
Replace with a new device.

↓

Recheck from check item (3.2.).
If it does not work, replace the PCB.

When the results of check item (3-11.2.) are "00 or 04"
(Detection of DDC is not OK.)

↓

Check the DDC line. (HDMI IN5 - 7)

↓

Check item(3-11.4.). Check the DDC line :
Are waveforms of "DDCSCK" and "DDCSDA" observed at the test point near the HDMI input terminal [JK391/JK392/JK393]?

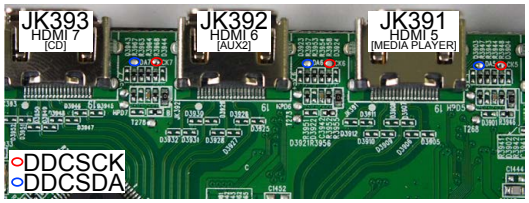

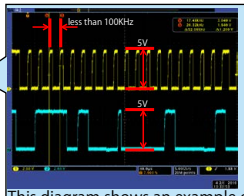

This diagram shows an example of the DDC communication waveform.
-The high level voltage is 5V.
-The frequency of the DDC CLK is 100kHz or less.
Check at each test point.
Voltage scale : 2.0V/div
Time scale : 40us/div

↓ YES

HDMI Switcher1 [IC391] is faulty.
Replace with a new device.

↓

Recheck from check item (3.2.).
If it does not work, replace the PCB.

↓ NO

Check for a short circuit in the DDC line.
If there is no problem, the HDMI Switcher1 [IC391] is faulty.
Replace with a new device.

↓

Recheck from check item (3.2.).
If it does not work, replace the PCB.

When the results of check item (3-11.2.) are "22 or 11"
(Detection of DDC is OK.)

↓

Checking the TMDS status register (HDMI Switcher1)

↓

Check item(3-11.5.). Checking register of the TMDS CLK detection status register :
Send the following command from Termite.exe.

Send the command "i 002E 00FF 0001".

When the following value is returned, go to YES.
HDMI IN5 "C4", HDMI IN6 "A2", HDMI IN7 "91"

When the following value is returned, go to NO.
HDMI IN5 "C0", HDMI IN6 "A0", HDMI IN7 "90"

Example

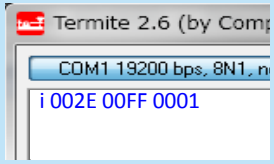

NO →

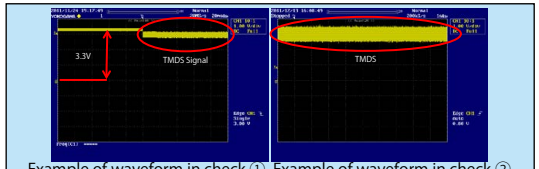

Example of waveform in check ①
Voltage scale : 1.0V/div
Time scale : 20ms/div

Example of waveform in check ②
Voltage scale : 1.0V/div
Time scale : 1s/div

Check item(3-11.7.). Checking the TMDS input waveform. :
Check the TMDS waveform at the following test point.
Is the waveform like the sample?

HDMI IN5
55/56/58/59/61/62/64/65 pin

HDMI IN6
80/81/83/84/86/87/89/90 pin

HDMI IN7
93/94/96/97/99/100/102/103 pin

YES ↓

HDMI Switcher1 [IC391] is faulty.
Replace with a new device.

NO ↓

Check for a short circuit in the pattern of the TMDS line of the HDMI Switcher1 [IC391] from the HDMI input terminal.
If there is no problem, the HDMI Switcher1 [IC391] is faulty.
Replace with a new device.

↓

Recheck from check item (3.2.).
If it does not work, replace the PCB.

YES ↓

Checking the HPD/RXSENSE status register. (HDMI ZONE2 OUT)

↓

Check item(3-11.6.). Check the HPD and RXSENSE register value of the device.
Send the following command from Termite.exe.
Send the command "i 0028 0040 0001".

Check the value.
Move to the branch destination according to the value returned.

Example

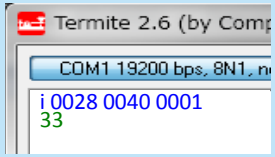

If it is normal, "33" is returned.
The correct resistor value cannot be checked if the AVR and TV are not connected by HDMI.

"33 or 23 or 13 or 03"
(Detection of HPD is OK / Detection of RXSENSE is OK) → Go to check item (3-11.8.)

"31 or 21 or 11 or 01"
(Detection of HPD is OK / Detection of RXSENSE is not OK) → Go to check item (3-11.11.)

"32 or 22 or 12 or 02"
(Detection of HPD is not OK / Detection of RXSENSE is OK) → Go to check item (3-11.12.)

"30 or 20 or 10 or 00"
(Detection of HPD is not OK / Detection of RXSENSE is not OK) → Go to check item (3-11.13.)

When the results of check item (3-11.6.) are "33 or 23 or 13 or 03"
(Detection of HPD is OK / Detection of RXSENSE is OK)

Checking the EDID register. (HDMI ZONE2 OUT)

Check item(3-11.8.). Check the Monitor EDID :
① Unplug the AC cord. Plug the AC cord into a power outlet.
② Send the transmission command "m_3" from Termite.exe.
Are the first eight bytes of the returned value "00FFFFFFFFFFFF00"?

Example

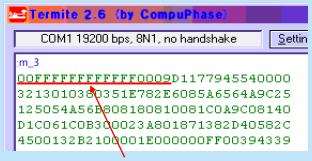

The first eight bytes are normally "00FFFFFFFFFFFF00".
The correct resistor value cannot be checked if the AVR and TV are not connected by HDMI.

YES

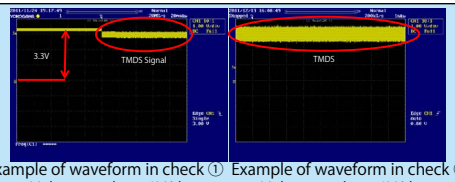

Example of waveform in check ①
Voltage scale : 1.0V/div
Time scale : 20ms/div

Example of waveform in check ②
Voltage scale : 1.0V/div
Time scale : 1s/div

NO

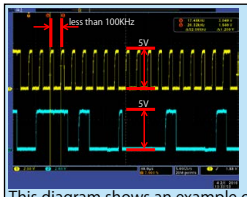

This diagram shows an example of the DDC communication waveform.
-The high level voltage is 5V.
-The frequency of the DDC CLK is 100kHz or less.
Check at each test point.
Voltage scale : 2.0V/div
Time scale : 40us/div

Check item(3-11.9.). Checking the TMDS :
Check the TMDS waveform at the following test point.

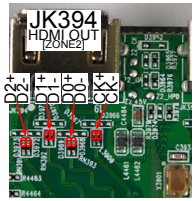

Check item(3-11.10.). Check the communication :
Do "CK" and "DA" indicate (5V) at the test point near HDMI output connector [JK394]?

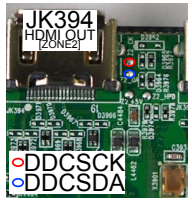

YES

NO

Check for a short circuit in the TMDS line.
If there is no problem, the HDMI Switcher1 [IC391] is faulty.
Replace with a new device.

HDMI Switcher1 [IC391] is faulty.
Replace with a new device.

YES

NO

Check for a short circuit in the DDC line.
If there is no problem, the HDMI Switcher1 [IC391] is faulty.
Replace with a new device.

HDMI Switcher1 [IC391] is faulty.
Replace with a new device.

Recheck from check item (3.2.).
If it does not work, replace the PCB.

When the results of check item (3-11.6.) are "31 or 21 or 11 or 01"
(Detection of HPD is OK / Detection of RXSENSE is not OK)

↓

Check the TMDS. (HDMI ZONE2 OUT)

↓

Check item(3-11.11.). Checking the RXSENSE :
Does the test point near HDMI output terminal [JK394] indicate (3.3V)?

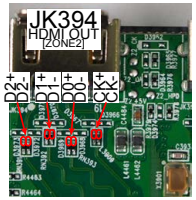

YES ↓ NO

NO: Check for a short circuit in the TMDS line.
If there is no problem, the HDMI Switcher1 [IC391] is faulty.
Replace with a new device.

YES: HDMI Switcher1 [IC391] is faulty.
Replace with a new device.

↓

Recheck from check item (3.2.).
If it does not work, replace the PCB.

When the results of check item (3-11.6.) are "32 or 22 or 12 or 02"
(Detection of HPD is not OK / Detection of RXSENSE is OK)

↓

Check the HPD. (HDMI ZONE2 OUT)

↓

Check item(3-11.12.). Checking the HPD :
Does the test point near HDMI output terminal [JK394] indicate Hi(3-5V)?

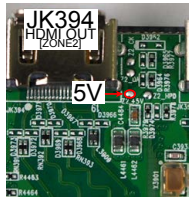

YES ↓ NO

NO: Check for a short circuit in the HPD line.
If there is no problem, the HDMI Switcher1 [IC391] is faulty.
Replace with a new device.

YES: HDMI Switcher1 [IC391] is faulty.
Replace with a new device.

↓

Recheck from check item (3.2.).
If it does not work, replace the PCB.

When the results of check item (3-11.6.) are "30 or 20 or 10 or 00"
(Detection of HPD is not OK / Detection of RXSENSE is not OK)

↓

Check the TMDS/HPD. (HDMI ZONE2 OUT)

↓

Check item(3-11.13.). Checking the HPD and RXSENSE. :
Does the test point near HDMI output terminal [JK394] indicate (3.3V)?
Does the test point (HPD) near HDMI output terminal [JK394] indicate "Hi(3-5V)"?

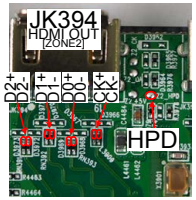

YES ↓ NO

NO → Check for a short circuit in the TMDS/HPD line.
If there is no problem, the HDMI Switcher1 [IC391] is faulty.
Replace with a new device.

YES → HDMI Switcher1 [IC391] is faulty.
Replace with a new device.

↓

Recheck from check item (3.2.).
If it does not work, replace the PCB.

3-12. Switcher2 failure detection procedure

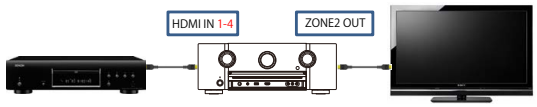

※ In order to check, connect the player to the HDMI terminal and configure the player as AVR source.
Next, turn on the power for the player and TV and start playback on the player.

↓

Checking the +5V/DDC status register (HDMI Switcher2)

↓

Check item(3-12.1.). Checking the 5V status register :
Send the following command from Termite.exe.

Send the command "i 0056 00FF 0001".

Case of IN1
Is the return value "88 or 80" ?
(IN2 : "44 or 40", IN3 : "22 or 20", IN4 : "11 or 10")

Example

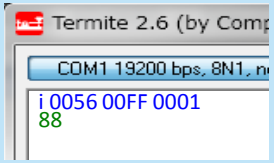

YES ↓

NO → Go to check item (3-12.3.)

Check item(3-12.2.). Checking the DDC status register :
Send the following command from Termite.exe.

Case of IN1
Send the command "i 0053 00B4 0001".
Case of IN2
Send the command "i 0053 0084 0001".
Case of IN3
Send the command "i 0053 0054 0001".
Case of IN4
Send the command "i 0053 0024 0001".

Move to the branch destination according to the value returned.

Example

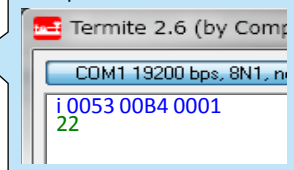

"00 or 04"
(Detection of DDC is not OK.) → Go to check item (3-12.4.)

"22 or 11"
(Detection of DDC is OK) → Go to check item (3-12.5.)

When the results of check item (3-12.1.) are "NO"
(Detection of 5V is not OK)

↓

Check the +5V voltage. (HDMI IN1 - 4)

↓

Check item(3-12.3.). Check the +5V voltage.
Does the test point near HDMI input terminal [JK381/JK382/JK383/JK384] indicate 5V?

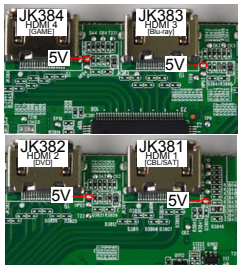

YES ↓

HDMI Switcher2 [IC381] is faulty.
Replace with a new device.

↓

Recheck from check item (3.3.).
If it does not work, replace the PCB.

NO ↓

Check for a short circuit in the 5V line and the 5V Switch IC [IC392].
If there is no problem, the HDMI Switcher2 [IC381] or the 5 V Switch IC [IC392] is faulty
Replace with a new device.

↓

Recheck from check item (3.3.).
If it does not work, replace the PCB.

When the results of check item (3-12.2.) are "00 or 04"
(Detection of DDC is not OK.)

↓

Check the DDC line. (HDMI IN1 - 4)

↓

Check item(3-12.4.). Check the DDC line :
Are waveforms of "DDCSCK" and "DDCSDA" observed at the test point near the HDMI input terminal [JK381/JK382/JK383/JK384]?

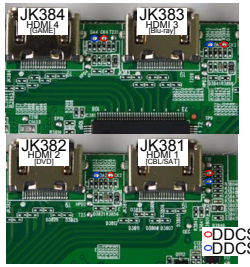

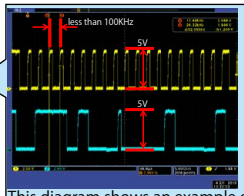

This diagram shows an example of the DDC communication waveform.
-The high level voltage is 5V.
-The frequency of the DDC CLK is 100kHz or less.
Check at each test point.
Voltage scale : 2.0V/div
Time scale : 40us/div

YES ↓

HDMI Switcher2 [IC381] is faulty.
Replace with a new device.

↓

Recheck from check item (3.3.).
If it does not work, replace the PCB.

NO ↓

Check for a short circuit in the DDC line.
If there is no problem, the HDMI Switcher2 [IC381] is faulty.
Replace with a new device.

↓

When the results of check item (3-12.2.) are "22 or 11"
(Detection of DDC is OK.)

Checking the TMDS status register (HDMI Switcher2)

Check item(3-12.5.). Checking register of the TMDS CLK detection status register :

Send the following command from Termite.exe.
Send the command "i 0056 00FF 0001".

When the following value is returned, go to YES.
HDMI IN1 "88", HDMI IN2 "44", HDMI IN3 "22", HDMI IN4 "11"

When the following value is returned, go to NO.
HDMI IN1 "80", HDMI IN2 "40", HDMI IN3 "20", HDMI IN4 "10"

Example

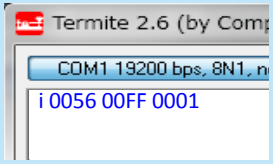

NO

YES

Checking the TMDS status register (HDMI Switcher2 -> HDMI Switcher1)

Check item(3-12.7.). Check the TMDS CLK detection status of the register.

Send the following command from Termite.exe.
Send the command "i 002E 00FF 0001".

Is the return value "88" ?

Example :

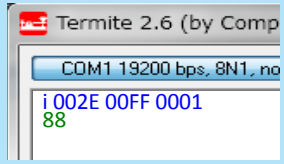

If it is normal, "88" is returned.

NO

YES

HDMI Switcher1 [IC391] is faulty.
Replace with a new device.

Recheck from check item (3.3.).
If it does not work, replace the PCB.

Check item(3-12.6.). Checking the TMDS input waveform. :
Check the TMDS waveform at the following test point.
Is the waveform like the sample?

HDMI IN1
42/43/45/46/48/49/51/52 pin

HDMI IN2
55/56/58/59/61/62/64/65 pin

HDMI IN3
80/81/83/84/86/87/89/90 pin

HDMI IN4
93/94/96/97/99/100/ 102/103 pin

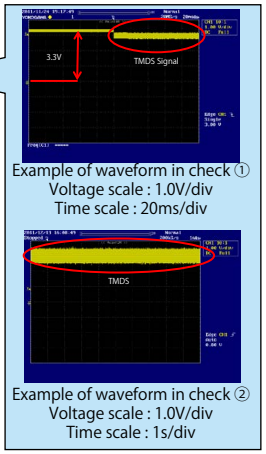

Example of waveform in check ①
Voltage scale : 1.0V/div
Time scale : 20ms/div

Example of waveform in check ②
Voltage scale : 1.0V/div
Time scale : 1s/div

YES

HDMI Switcher2 [IC381] is faulty.
Replace with a new device.

NO

Check for a short circuit in the pattern of the TMDS line of the HDMI Switcher2 [IC381] from the HDMI input terminal.
If there is no problem, the HDMI Switcher2 [IC381] is faulty.
Replace with a new device.

Recheck from check item (3.3.).
If it does not work, replace the PCB.

Check item(3-12.8.). Checking the TMDS input waveform. :
Check the TMDS waveform at the following test point.
Is the waveform like the sample?

42/43/45/46/48/49/51/52 pin

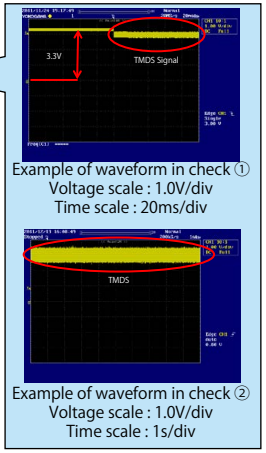

Example of waveform in check ①
Voltage scale : 1.0V/div
Time scale : 20ms/div

Example of waveform in check ②
Voltage scale : 1.0V/div
Time scale : 1s/div

YES

NO

Check for a short circuit in the TMDS line.
If there is no problem, the HDMI Switcher2 [IC381] is faulty.
Replace with a new device.

3-13. Tx failure detection procedure

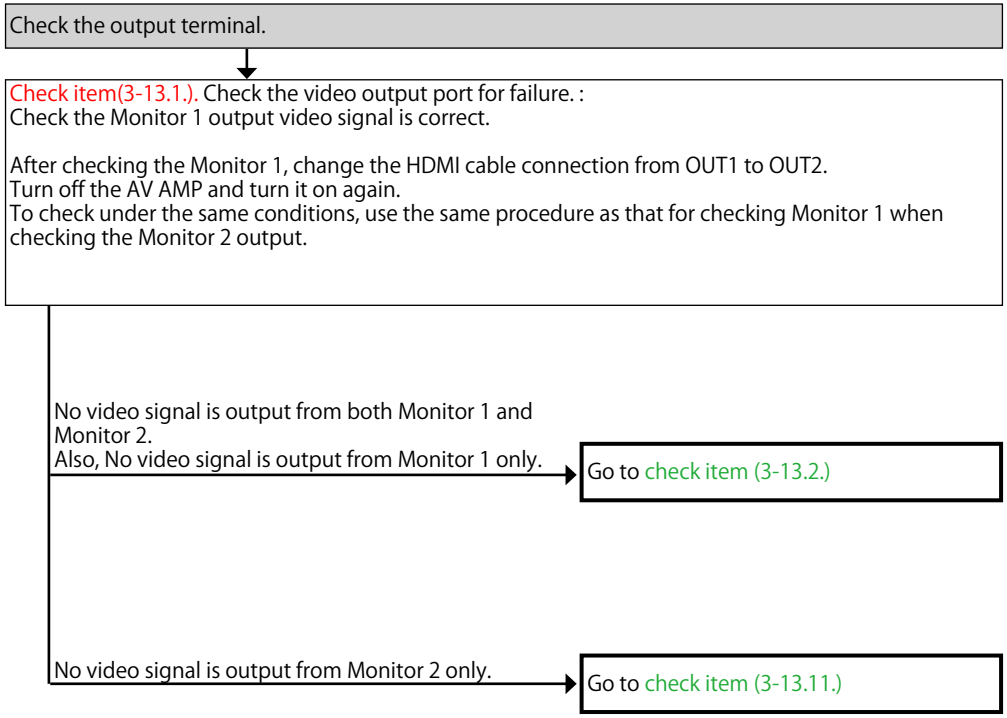

Checking operation between the HDMI (SW) device and the HDMI device (Tx).
Checking operation between the HDMI (Tx) device and TV.

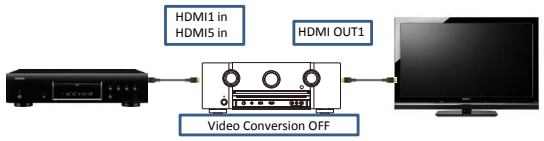

Checking the TMDS status register (Switcher1/2 -> HDMI Tx)

Check item(3-13.2.). Check the TMDS CLK detection status of the register.
Send the following command from Termite.exe.

Send the command "i 0006 00FF 0001".
When checking the signal path from HDMI1 to HDMI OUT1
"72" : Go to YES.
"74" : Go to No.

When checking the signal path from HDMI5 IN to HDMI OUT1
"71" : Go to YES.
"74" : Go to No.

Example

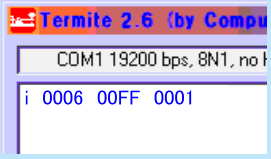

YES

The first operation : Checking between Monitor 1 and the TV.
Go to check item (3-13.1.)
Next operation : Checking between Monitor 2 and the TV.
Go to check item (3-13.8.)

NO

Check item(3-13.3.). Checking the TMDS input. :
TMDS waveform at the following points.

HDMI IN1
124/125/127/128/130/131/133/134 pin

HDMI IN5
137/138/140/141/143/144/146/147 pin

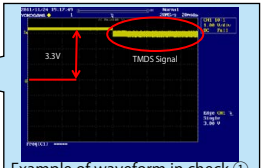

Example of waveform in check ①
Voltage scale : 1.0V/div
Time scale : 20ms/div

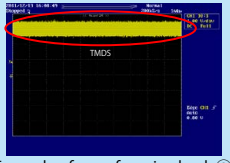

Example of waveform in check ②
Voltage scale : 1.0V/div
Time scale : 1s/div

NO

HDMI Tx [IC431] is faulty.
Replace with a new device.

YES

Recheck from check item (3.4.).
If it does not work, replace the PCB.

NO

Case of HDMI IN1
HDMI Switcher2 [IC381] is faulty.
Replace with a new device.

Case of HDMI IN5
HDMI Switcher1 [IC391] is faulty.
Replace with a new device.

Checking between Monitor1 and the TV.
Connect Monitor1 to the TV and check the following items with the TV turned on.

Checking the HPD/RXSENSE status register. (HDMI Tx -> Monitor)

Check item(3-13.4.). Check the HPD and RXSENSE register value of the HDMI TX device. :
Send the following command from Termite.exe.

Send the command "i 0000 0040 0001".

Move to the branch destination according to the value returned.

Example

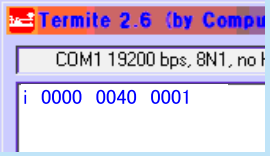

"30"
(Detection of HPD is OK / Detection of RXSENSE is OK)
→ Go to check item (3-13.5.)

"10"
(Detection of HPD is OK / Detection of RXSENSE is not OK)
→ Go to check item (3-13.8.)

"20"
(Detection of HPD is not OK / Detection of RXSENSE is OK)
→ Go to check item (3-13.9.)

"00"
(Detection of HPD is not OK / Detection of RXSENSE is not OK)
→ Go to check item (3-13.10.)

When the results of check item (3-13.4.) are "30"
(Detection of HPD is OK / Detection of RXSENSE is OK)

Checking the EDID register. (HDMI OUT1)

Check item(3-13.5.). Check the Monitor EDID :
① Unplug the AC cord. Plug the AC cord into a power outlet.
② Send the transmission command "m_1" from Termite.exe.
Are the first eight bytes of the returned value "00FFFFFFFFFFFF00"?

Example

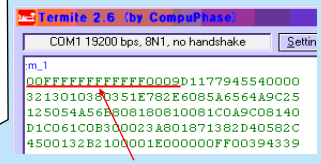

The first eight bytes are normally "00FFFFFFFFFFFF00".
The correct resistor value cannot be checked if the AVR and TV are not connected by HDMI.

YES

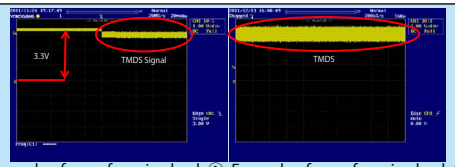

Example of waveform in check ①
Voltage scale : 1.0V/div
Time scale : 20ms/div

Example of waveform in check ②
Voltage scale : 1.0V/div
Time scale : 1s/div

NO

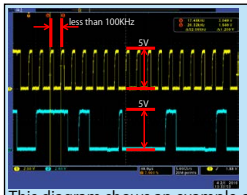

This diagram shows an example of the DDC communication waveform.
-The high level voltage is 5V.
-The frequency of the DDC CLK is 100kHz or less.
Check at each test point.
Voltage scale : 2.0V/div
Time scale : 40us/div

Check item(3-13.6.). Checking the TMDS :
Check the TMDS waveform at the following test point.

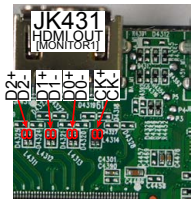

Check item(3-13.7.). Check the communication :
Are the waveforms for "CKL" and "DATA" at the test point near the HDMI output connector [JK431] correct (as shown in the figure)?

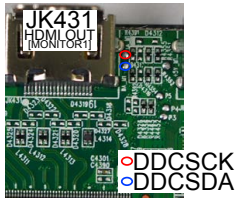

YES

NO

Check for a short circuit in the TMDS line.
If there is no problem, the HDMI Tx [IC431] is faulty.
Replace with a new device.

HDMI Tx [IC431] is faulty.
Replace with a new device.

YES

NO

Check for a short circuit in the DDC line.
If there is no problem, the HDMI Tx [IC431] is faulty.
Replace with a new device.

HDMI Tx [IC431] is faulty.
Replace with a new device.

Recheck from check item (3.4.).
If it does not work, replace the PCB.

When the results of check item (3-13.4.) are "10"
(Detection of HPD is OK / Detection of RXSENSE is not OK)

Check the TMDS. (HDMI OUT1)

Check item(3-13.8.). Checking the RXSENSE :
Does the test point near HDMI output terminal [JK431] indicate (3.3V)?

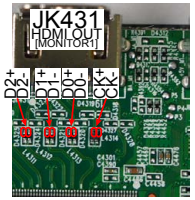

YES

NO

Check for a short circuit in the TMDS line.
If there is no problem, the HDMI Tx [IC431] is faulty.
Replace with a new device.

HDMI Tx [IC431] is faulty.
Replace with a new device.

Recheck from check item (3.4.).
If it does not work, replace the PCB.

When the results of check item (3-13.4.) are "20"
(Detection of HPD is not OK / Detection of RXSENSE is OK)

Check the HPD. (HDMI OUT1)

Check item(3-13.9.). Checking the HPD :
Does the test point (HPD) near HDMI output terminal [JK431] indicate "Hi(3-5V)"?

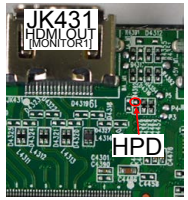

YES

NO

Check for a short circuit in the HPD line.
If there is no problem, the HDMI Tx [IC431] is faulty.
Replace with a new device.

HDMI Tx [IC431] is faulty.
Replace with a new device.

Recheck from check item (3.4.).
If it does not work, replace the PCB.

When the results of check item (3-13.4.) are "00"
(Detection of HPD is not OK / Detection of RXSENSE is not OK)

↓

Check the TMDS/HPD. (HDMI OUT1)

↓

Check item(3-13.10.). Checking the HPD and RXSENSE. :
Does the test point near HDMI output terminal [JK431] indicate (3.3V)?
Does the test point (HPD) near HDMI output terminal [JK431] indicate "Hi(3-5V)"?

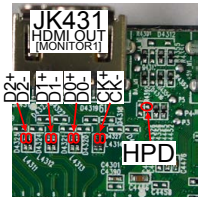

YES ↓ NO

YES:
HDMI Tx [IC431] is faulty.
Replace with a new device.

NO:
Check for a short circuit in the TMDS/HPD line.
If there is no problem, the HDMI Tx [IC431] is faulty.
Replace with a new device.

↓

Recheck from check item (3.4.).
If it does not work, replace the PCB.

Checking between Monitor 2 and the TV.
Connect Monitor2 to the TV and check the following items with the TV turned on.

↓

Checking the HPD/RXSENSE status register. (HDMI OUT2)

↓

Check item(3-13.11.). Check the HPD and RXSENSE register value of the HDMI TX device. :
Send the following command from Termite.exe.

Send the command "i 0000 0040 0001".

Move to the branch destination according to the value returned.

Example

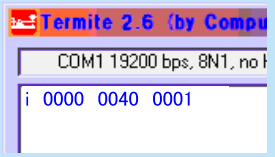

"03"
(Detection of HPD is OK / Detection of RXSENSE is OK)
→ Go to check item (3-13.12.)

"01"
(Detection of HPD is OK / Detection of RXSENSE is not OK)
→ Go to check item (3-13.15.)

"02"
(Detection of HPD is not OK / Detection of RXSENSE is OK)
→ Go to check item (3-13.16.)

"00"
(Detection of HPD is not OK / Detection of RXSENSE is not OK)
→ Go to check item (3-13.17.)

When the results of check item (3-13.11.) are "03"
(Detection of HPD is OK / Detection of RXSENSE is OK)

Checking the EDID register. (OUT2)

Check item(3-13.12.). Check the Monitor EDID :
① Unplug the AC cord. Plug the AC cord into a power outlet.
② Send the transmission command "m_2" from Termite.exe.
Are the first eight bytes of the returned value "00FFFFFFFFFFFF00"?

Example

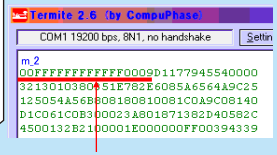

The first eight bytes are normally "00FFFFFFFFFFFF00".
*If the AVR and the TV are not connected via HDMI, the correct register value cannot be verified.

YES

Check item(3-13.13.). Checking the TMDS :
Check the TMDS waveform at the following test point.

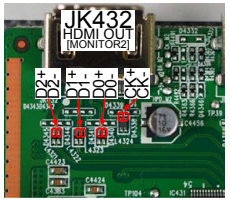

YES

HDMI Tx [IC431] is faulty.
Replace with a new device.

NO

Check for a short circuit in the TMDS line.
If there is no problem, the HDMI Tx [IC431] is faulty.
Replace with a new device.

HDMI Tx [IC431] is faulty.
Replace with a new device.

NO

Check item(3-13.14.). Check communication with the monitor :
Are waveforms of "DDCSCK" and "DDCSDA" observed at the test point near the HDMI output terminal [JK432]?

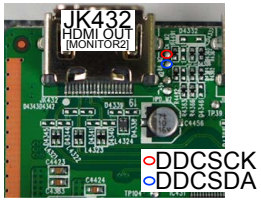

YES

HDMI Tx [IC431] is faulty.
Replace with a new device.

NO

Recheck from check item (3.4.).
If it does not work, replace the PCB.

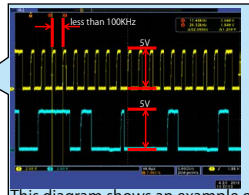

This diagram shows an example of the DDC communication waveform.
-The high level voltage is 5V.
-The frequency of the DDC CLK is 100kHz or less.
Check at each test point.
Voltage scale : 2.0V/div
Time scale : 40us/div

When the results of check item (3-13.11.) are "01"
(Detection of HPD is OK / Detection of RXSENSE is not OK)

Check the RXSENSE. (OUT2)

Check item(3-13.15.). Checking the RXSENSE :
Does the test point of RXSENSE close to the HDMI output terminal [JK432] indicate the (3.3V)?

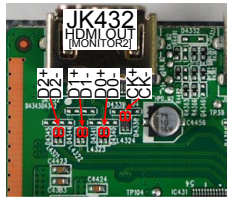

YES

NO

Check for a short circuit in the TMDS line.
If there is no problem, the HDMI Tx [IC431] is faulty.
Replace with a new device.

HDMI Tx [IC431] is faulty.
Replace with a new device.

Recheck from check item (3.4.).
If it does not work, replace the PCB.

When the results of check item (3-13.11.) are "02"
(Detection of HPD is not OK / Detection of RXSENSE is OK)

Check the HPD. (OUT2)

Check item(3-13.16.). Checking the HPD :
Does the voltage of HPD test point close to the HDMI output terminal [JK432] indicate Hi (3-5V)?

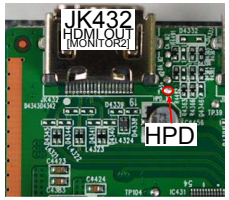

YES

NO

Check for a short circuit in the HPD line.
If there is no problem, the HDMI Tx [IC431] is faulty.
Replace with a new device.

HDMI Tx [IC431] is faulty.
Replace with a new device.

Recheck from check item (3.4.).
If it does not work, replace the PCB.

When the results of check item (3-13.11.) are "00"
(Detection of HPD is not OK / Detection of RXSENSE is not OK)

↓

Checking the HPD/RXSENSE status register. (OUT2)

↓

Check item(3-13.17.). Checking the HPD and RXSENSE. :
Does the test point of RXSENSE close to the HDMI output terminal [JK432] indicate the (3.3V)?
Does the voltage of HPD test point close to the HDMI output terminal [JK432] indicate Hi (3-5V)?

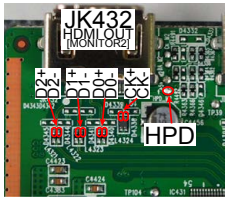

YES ↓ NO

Check for a short circuit in the TMDS/ HPD line.
If there is no problem, the HDMI Tx [IC431] is faulty.
Replace with a new device.

HDMI Tx [IC431] is faulty.
Replace with a new device.

↓

Recheck from check item (3.4.).
If it does not work, replace the PCB.

3-14. HDMI DDC Buffer (TCA9517) failure detection procedure

Checking operation between the HDMI (HDMI DDC Buffer) and the player

※ In order to check, connect the player to the HDMI terminal and configure the player as AVR source.
Check the sound output while turning on the player.

Checking the +5V/DDC status register (HDMI DDC Buffer)

Check item(3-14.1.). Checking the 5V status register :
Send the following command from Termite.exe.
Send the command "i 0006 00FF 0001".

Check the value.
Move to the branch destination according to the value returned.

Example

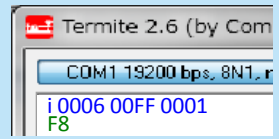

"78 or 70"
(Detection of 5V is not OK.)

→ Go to check item (3-14.3.)

"F8 or F0"
(Detection of 5V is OK)

Check item(3-14.2.). Checking the status register :
Send the following command from Termite.exe.
Send the command "i 0003 00B4 0001".

Check the value.
Move to the branch destination according to the value returned.

Example

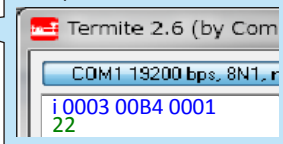

"00 or 04"
(Detection of DDC is not OK.)

→ Go to check item (3-14.4.)

"22"
(Detection of DDC is OK)

→ Go to check item (3-14.5.)

When the results of check item (3-14.1.) are "78 or 70"
(Detection of 5V is not OK.)

Check the +5V voltage. (HDMI DDC Buffer)

Check item(3-14.3.). Check the +5V voltage.
Does the HDMI Tx [IC431] test point indicate (5V)?
The test points are as follows.

NO → Check for a short circuit in the 5 V line, the Front HDMI FFC, and the 5 V Switch [IC392].
If there is no problem, the HDMI Tx [IC431] or the 5 V Switch [IC392] is faulty.
Replace with a new device.

YES

HDMI Tx [IC431] is faulty.
Replace with a new device.

Recheck from check item (3.4.).
If it does not work, replace the PCB.

When the results of check item (3-14.2.) are "00 or 04"
(Detection of DDC is not OK.)

Check the DDC Line. (HDMI DDC Buffer)

Check item(3-14.4.). Check the DDC line :
Are the "DDCSCK" and "DDCSDA" waveforms for the HDMI Tx [IC431] signal correct (as shown in the figure)?
The test points are as follows.

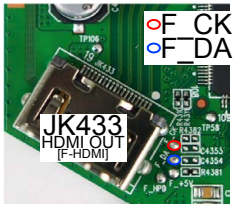

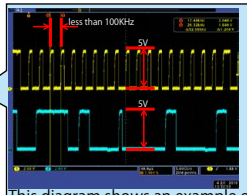

This diagram shows an example of the DDC communication waveform.
-The high level voltage is 5V.
-The frequency of the DDC CLK is 100kHz or less.
Check at each test point.
Voltage scale : 2.0V/div
Time scale : 40us/div

NO → Check for a short circuit in the DDC line and check the Front HDMI FFC.
If there is no problem, the HDMI DDC Buffer [IC201] is faulty.
Replace with a new device.

YES

HDMI Tx [IC431] is faulty.
Replace with a new device.

Recheck from check item (3.4.).
If it does not work, replace the PCB.

When the results of check item (3-14.2.) are "22"
(Detection of DDC is OK)

↓

Checking the TMDS status register (HDMI DDC Buffer)

↓

Check item(3-14.5.). Check the TMDS CLK detection status of the register.

Send the following command from Termite.exe.
Send the command "i 0006 00FF 0001".

When the following value is returned, go to YES.
"F8"

When the following value is returned, go to NO.
"F0"

Example

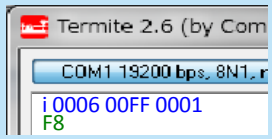

NO

YES

↓

Check item(3-14.7.). Check the AUDIO signal output :
Check the AUDIO signal waveform at the following test point.
Is the waveform like the sample?
(MCK/64FS/FS/I2S0/I2S1/I2S2/I2S3/SPDIF)

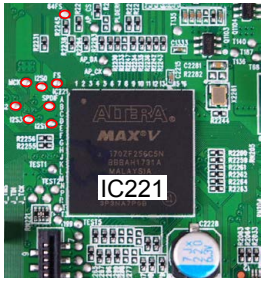

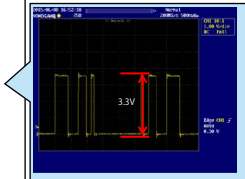

The diagram shows an example of the waveform of I2S0.
Waveform check points
- Crest value (3.3 V normally)
- Signal change
Check the waveform of each pin.
Voltage scale : 1.0V/div
Time scale : 500us/div

YES

The DIGITAL AUDIO block is faulty.
Check the DIGITAL AUDIO device.
Check "AUDIO" in troubleshooting.
If it does not work, replace the PCB.

NO

HDMI Tx [IC431] is faulty.
Replace with a new device.

↓

Recheck from check item (3.4.).
If it does not work, replace the PCB.

Check item(3-14.6.). Checking the TMDS input waveform. :
Check the TMDS waveform at the following test point.
Is the waveform like the sample?

70/71/73/74/76/77/79/80 pin

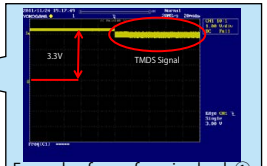

Example of waveform in check ①
Voltage scale : 1.0V/div
Time scale : 20ms/div

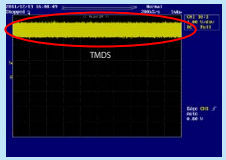

Example of waveform in check ②
Voltage scale : 1.0V/div
Time scale : 1s/div

YES

HDMI Tx [IC431] is faulty.
Replace with a new device.

NO

Check for a short circuit in the TMDS line and the Front HDMI FFC.
If there is no problem, the HDMI DDC Buffer [IC201] is faulty.
Replace with a new device.

↓

Recheck from check item (3.4.).
If it does not work, replace the PCB.

3-15. GUI and PLD failure detection procedure

Check item(3-15.1.). Does a video signal come from HDMI OUT to TV correctly? :

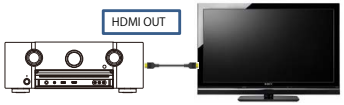

Turn Video Conversion "**ON**" on the setup menu.
(SETUP MENU-> Video-> Output Settings-> Video Conversion = On)
When the "**SETUP**" button on a remote control is pressed, is "**MENU**" displayed on TV which is connected to the HDMI output terminal on the AVR?

NO → Go to check item (3-15.2.)

YES → Go to check item (3-15.5.)

When the results of check item (3-15.1.) are "NO"
(When the menu display is not OK)

Check the Video signal line. (GUI -> HDMI Tx)

Check item(3-15.2.). Check the format of the resistor video signal :

Send the following command from Termite.exe.
Send the command "i 0020 0070 0001".

Is the return value "22/21/20/1F/15/14/13/11/10/06/05/04/02" ?

Example

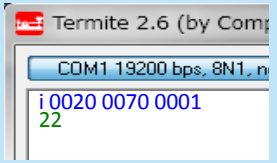

NO → Check the Video signal line. (GUI -> PLD)

YES → HDMI Tx [IC431] is faulty.
Replace with a new device.

Recheck from check item (3.5.).
If it does not work, replace the PCB.

Check item(3-15.3.). Check the PLD video signal line from the GUI :
Check the video signal waveform at the following test point.
Is the waveform like the sample?

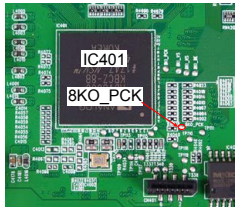

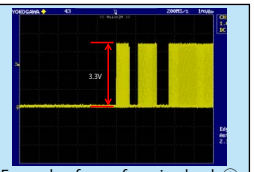

Example of waveform in check ①
Voltage scale : 1.0V/div
Time scale : 1ms/div

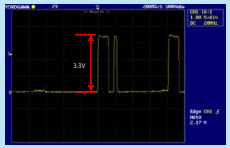

Example of waveform in check ②
Voltage scale : 1.0V/div
Time scale : 50ns/div

NO → Check the peripheral pattern between the GUI [IC401] and PLD [IC421].
If there is no problem, the GUI [IC401] is faulty.
Replace with a new device.

Recheck from check item (3.5.).
If it does not work, replace the PCB.

Check the Video signal line. (PLD -> HDMI Tx)

Check item(3-15.4.). Check the HDMI Tx video signal line from the PLD :
Check the video signal waveform at the following test point.
Is the waveform like the sample?

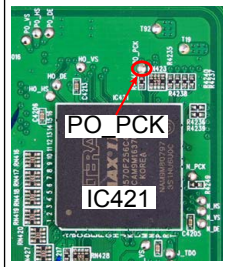

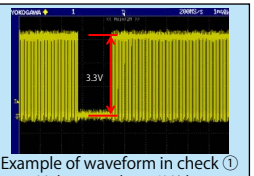

Example of waveform in check ①
Voltage scale : 1.0V/div
Time scale : 1ms/div

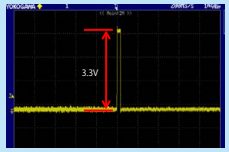

Example of waveform in check ②
Voltage scale : 1.0V/div
Time scale : 1us/div

YES → HDMI Tx [IC431] is faulty.
Replace with a new device.

NO → Check the peripheral pattern between the PLD [IC421] and HDMI Tx [IC431].
If there is no problem, the PLD [IC421] is faulty.
Replace with a new device.

Recheck from check item (3.5.).
If it does not work, replace the PCB.

When the results of check item (3-15.1.) are "YES"
(When the menu display is OK)

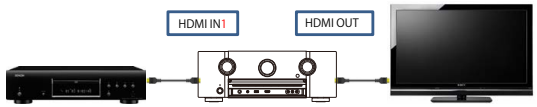

Turn Video Conversion "**ON**" on the setup menu.
(SETUP MENU-> Video-> Output Settings-> Video Conversion = On)
In order to check, connect the player to the HDMI terminal and configure the player as AVR source.
Next, turn on the power for the player and TV and start playback on the player.

Check the Video signal line. (HDMI Tx -> PLD)

Check item(3-15.5.). Check the PLD video signal line from the HDMI Tx :
Check the video signal waveform at the following test point.
Is the waveform like the sample?

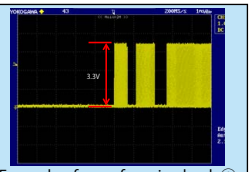
Example of waveform in check ①
Voltage scale : 1.0V/div
Time scale : 1ms/div

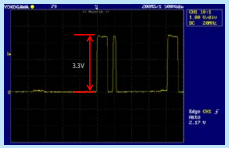
Example of waveform in check ②
Voltage scale : 1.0V/div
Time scale : 1us/div

YES

NO

Check the peripheral pattern between the HDMI Tx [IC431] and PLD [IC421].
If there is no problem, the HDMI Tx [IC431] is faulty.
Replace with a new device.

Recheck from check item (3.5.).
If it does not work, replace the PCB.

Check the Video signal line. (PLD -> GUI)

Check item(3-15.6.). Check the GUI video signal line from the PLD :
Check the video signal waveform at the following test point.
Is the waveform like the sample?

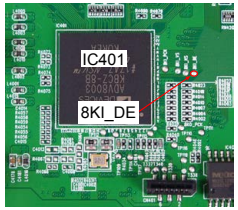

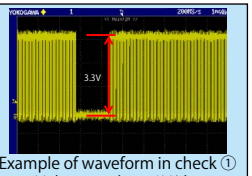
Example of waveform in check ①
Voltage scale : 1.0V/div
Time scale : 1ms/div

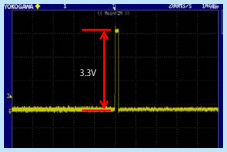
Example of waveform in check ②
Voltage scale : 1.0V/div
Time scale : 1us/div

YES

NO

GUI [IC401] is faulty.
Replace with a new device.

Check the peripheral pattern between the PLD [IC421] and GUI [IC401].
If there is no problem, the PLD [IC421] is faulty.
Replace with a new device.

Recheck from check item (3.5.).
If it does not work, replace the PCB.

4. Device implementation location

DIGITAL (A SIDE)

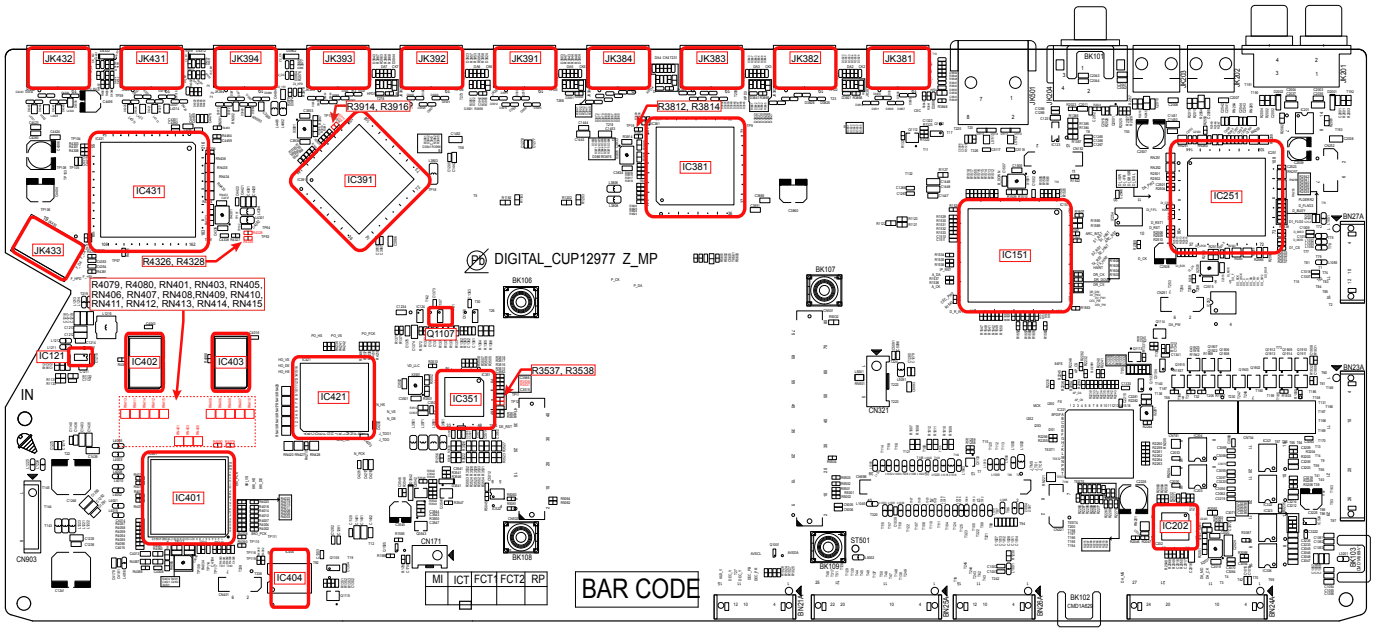

F-HDMI (A SIDE)

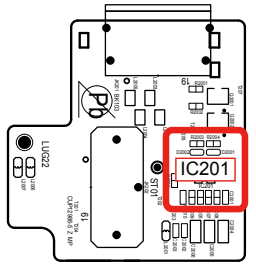

DIGITAL (B SIDE)

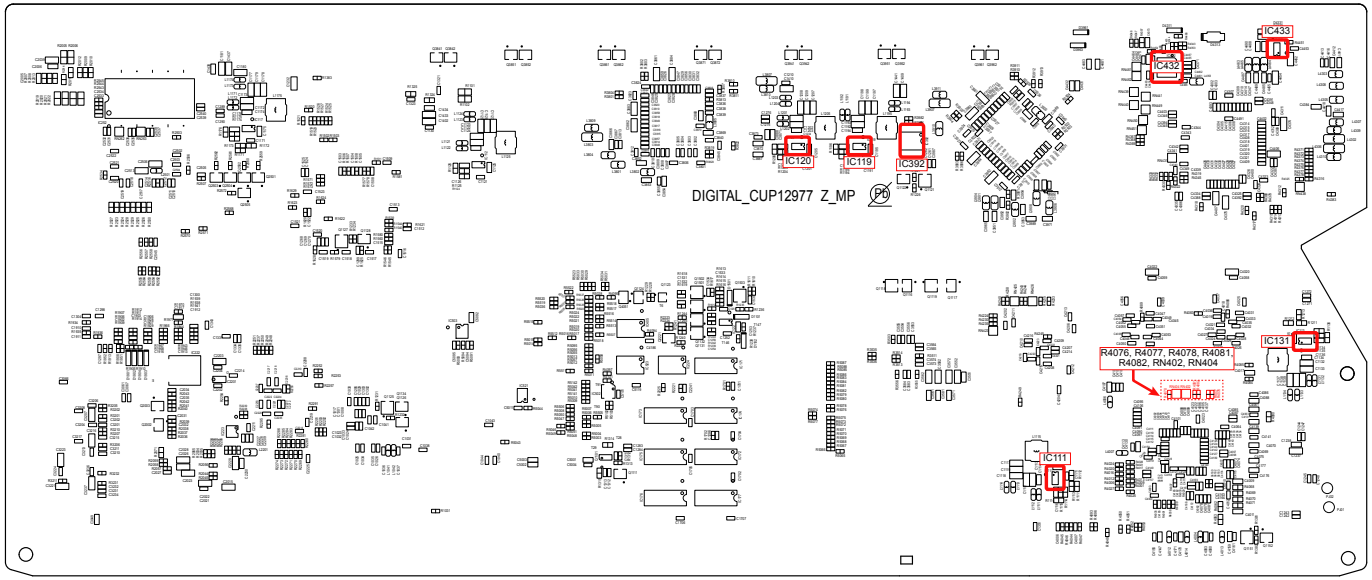

CLOCK FLOW & WAVE FORM IN DIGITAL BLOCK

WAVE FORM

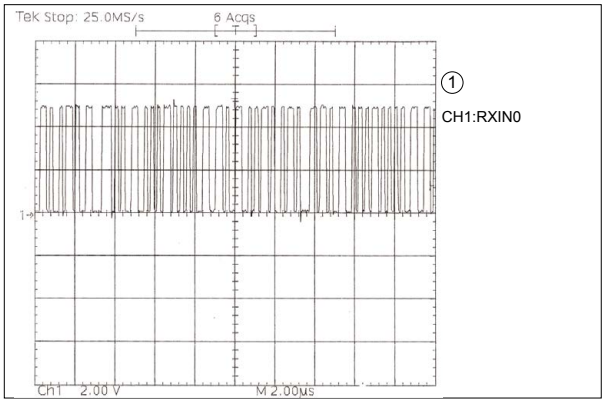

①
CH1:RXIN0

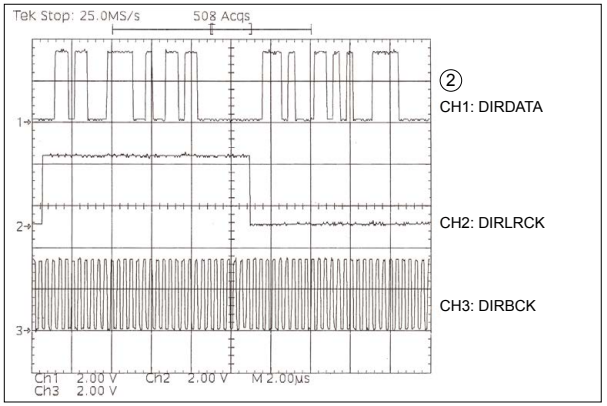

②
CH1: DIRDATA
CH2: DIRLRCK
CH3: DIRBCK

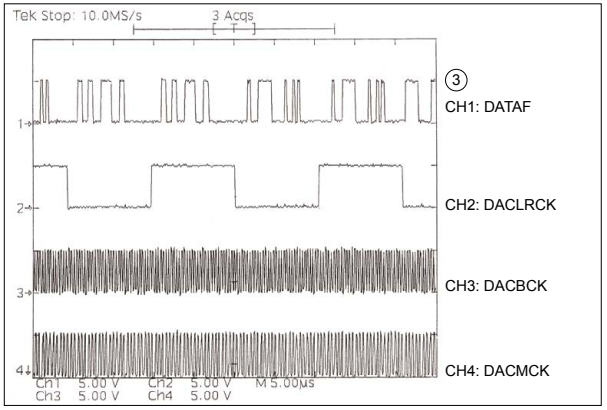

③
CH1: DATAF
CH2: DACLRCK
CH3: DACBCK
CH4: DACMCK

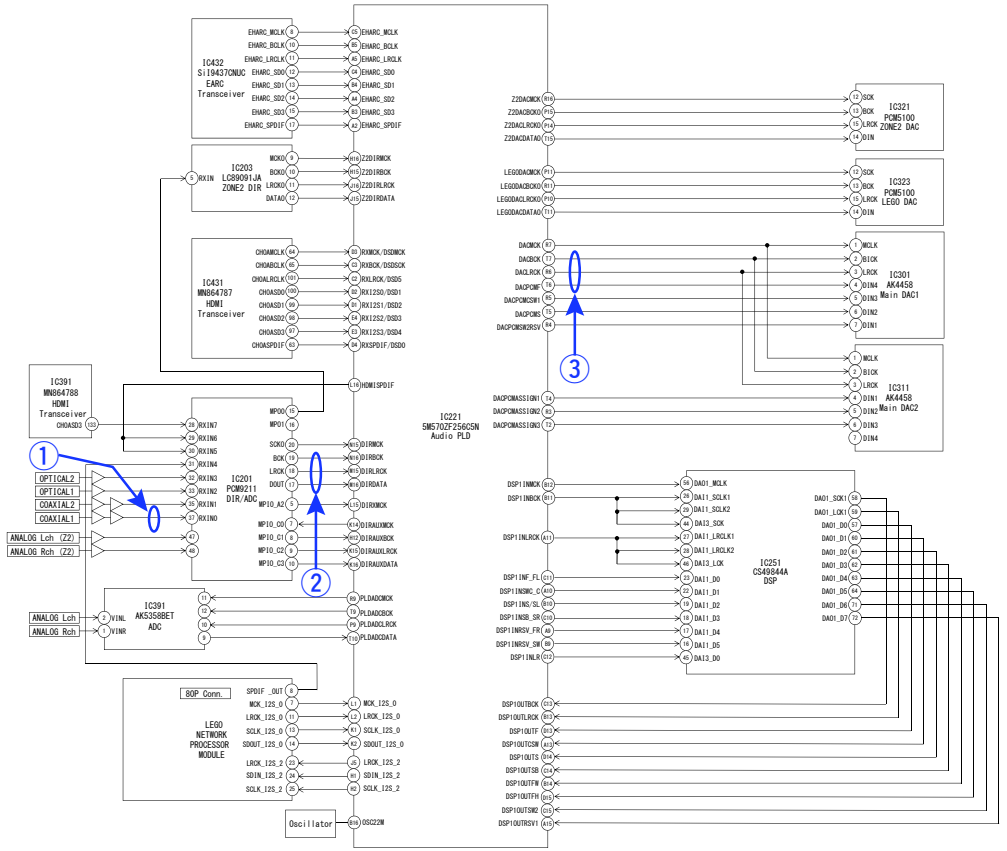

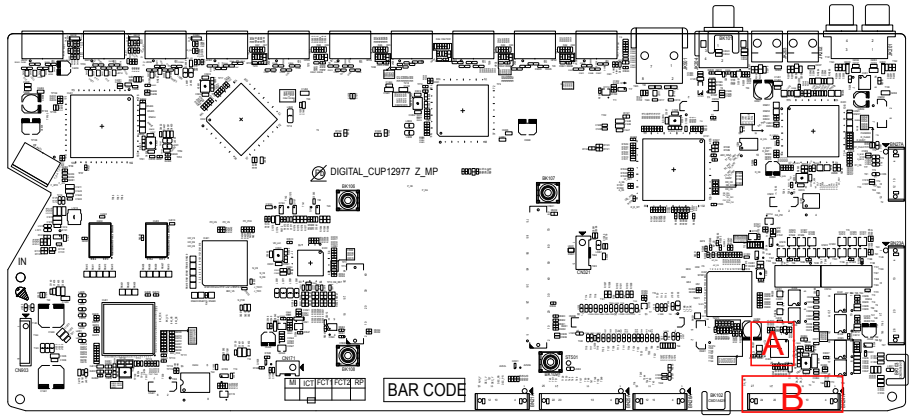

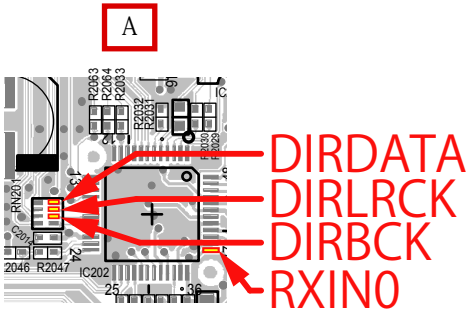

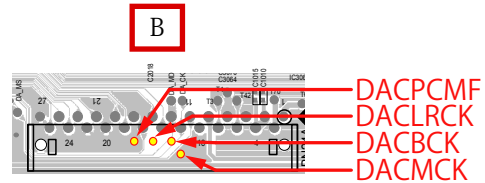

SPECIAL MODE

Special mode setting button

※ No. 1 - 4, 6 - 8 : While holding down buttons "**A**", "**B**" and "**C**" simultaneously, press the power button to turn on the power.
※ No. 5, 9, 10 : While the power is on, hold down buttons "**A**" and "**B**" for at least 3 seconds .

No.	Mode	Button A	Button B	Button C	Descriptions
1	Version Display Mode (u-COM / DSP Error Display)	DIMMER	STATUS	-	Displays the version of firmware such as the main firmware or DSP. Errors that have occurred are displayed. (See 1. Version Display Mode)
2	PANEL / REMOTE LOCK Selection Mode	M-DAX	DIMMER	-	Start this unit in the PANEL/REMOTE LOCK selection mode so that PANEL LOCK and Remote Lock can be switched between On and Off. (See 2. PANEL / REMOTE LOCK Selection Mode) •PANEL LOCK Mode (with Volume) Disables reception from all keys and encoders on the front panel except the power button (including the volume). •PANEL LOCK Mode (without Volume) Disables reception from all keys and encoders on the front panel except the power button and volume encoder. •PANEL LOCK mode is turned off
3	Selecting the Mode for Service-related	ZONE2 SOURCE	STATUS	-	This is a display for turning on each service-related mode. Service-related modes : No. 3-1 - No. 3-5 (See 3-5. TUNER STEP mode (U / N only))
3-1	Check the Video/Audio path Mode	↑	↑	-	This is a special mode for service confirmation used during repair work to simplify the confirmation work for the Audio channel / video channel. (See Service Path Check Mode)
3-2	Protection history display mode	↑	↑	-	Displays the protection occurrence history. (See 3-2. Protection History Display Mode)
3-3	232C Standby Clear Mode	↑	↑	-	Switches from 232C standby mode to normal standby mode. (See 3-3. 232C Standby Clear Mode)
3-4	Operation Info Mode	↑	↑	-	Displays the accumulated operating time of the unit, the number of times the power was switched on, and the number of occurrences of each protection. (See 3-4. Operation Info Mode)
3-5	TUNER STEP Mode (U and N model only)	↑	↑	-	Enables reception STEP of the ANALOG TUNER to be changed. (See 3-5. TUNER STEP mode (U / N only))
4	Protection Pass Mode	DIMMER	STATUS	SOUND MODE	Enables the power to be turned on when protection detection is disabled. (See 4. Protection Pass Mode)
5	Network Initialization Mode	TUNER PRESET CH -	DIMMER	-	Network module backup data is initialized. (See 5. Network Initialization Mode)
6	User Initialization Mode	M-DAX	ZONE2 SOURCE	-	Initialize the backup data for the MCU and network module. (Settings for the Installer Setup are not initialized.)
7	Factory Initialization Mode	TUNER PRESET CH -	TUNER PRESET CH +	-	Initialize the backup data only for MCU. (Settings for the Installer Setup are initialized) (Network function settings are not initialized.) (See Initializing this Unit)
8	Clearing the Operation Info	TUNER PRESET CH +	DIMMER	-	Clear the accumulated operating time of the unit, the number of times the power was switched on, and the number of occurrences of each protection. (See 6. Clearing the Operation Info)
9	HDMI Diagnostics Mode	DIMMER	SOUND MODE		This mode is used to identify and solve the cause when there is a connectivity issue with this unit and an HDMI device. For details on the operating methods and diagnosis procedures, see the HDMI Diagnostics and Troubleshooting guide issued on SDI.
10	Log Capture feature	TUNER PRESET CH +	STATUS	-	Acquires the Network Module log. The log is deleted when the Network Module is deleted. (See 7. Log Capture feature)

NOTE : If the two indicator lights at the bottom right of the FLD display "0.0__", this means that the unit has entered the special developer's mode. In this case, the RS-232C communication is not available. To release this special mode, press and hold the "**DIMMER**" and "**STATUS**" buttons for 3 seconds or more while the power is ON. The RS-232C communication is available when the two indicator lights at the bottom right of the FLD go out.

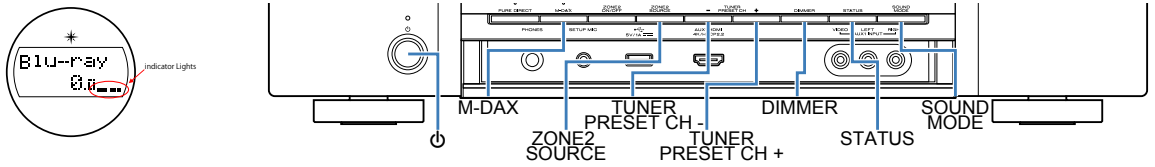

1. Version Display Mode

1.1. Actions

Version information is displayed when the device is started in this mode.

1.2. Starting up

While holding down buttons "**DIMMER**" and "**STATUS**" simultaneously, press the power button to turn on the power.
then press the "**STATUS**" button to display the information in section 1.3 on the display.
※ The version list is also displayed on GUI while the version is displayed on the display.

1.3. Display Order

Error information(See "1.4. Error display") → ① Model destination information, Serial Number → ② Firmware Package
→ ③ Main μ -com, Main 1st Boot Loader → ④ DSP → ⑤ Audio PLD → ⑥ Video PLD → ⑦ GUI SFLASH
→ ⑧ HEOS Version → ⑨ HEOS Build → ⑩ HEOS Module → ⑪ HEOS Configuration → ⑫ HEOS Locale
→ ⑬ Restore Version → ⑭ Ether Mac Address → ⑮ WiFi Mac Address → ⑯ BT Mac Address
→ ⑰ Audyssey App Interface Version

①Model destination information, Serial Number：

L1	SR6013 ＼
L2	SN*******
L3	********

＼ : Region (U, N, K, F)

②Firmware Package :

L1	PACKAGE
L2	
L3	****

③Main μ-com, Main 1st Boot Loader :

L1	M:*****
L2	********
L3	BL-**.**

④DSP ROM :

L1	DSP
L2	
L3	**.**

⑤Audio PLD :

L1	A.PLD
L2	
L3	**.**

⑥Video PLD :

L1	V.PLD
L2	
L3	**.**

⑦GUI SFLASH :

L1	GUI
L2	@@$＼****
L3	

@ : Model code, $: Brand code (De=1, Mz=2),
＼ : Region code (U=1, N=2, K=5, F=4, ALL=0),
* : version

⑧HEOS Version :

L1	HEOS Ver
L2	*.***
L3	.***

⑨HEOS Build :

L1	Build
L2	
L3	*****

⑩HEOS Module :

L1	Module
L2	
L3	***

⑪HEOS Config :

L1	Config
L2	Producti
L3	on

⑫HEOS Locale :

L1	Locale
L2	
L3	*****

⑬Restore Version:

L1	RSTR
L2	****
L3	********

⑭Ether MAC Address :

L1	EtherMAC
L2	******
L3	-******

⑮Wi-Fi MAC Address :

L1	Wi-FiMAC
L2	******
L3	-******

⑯Bluetooth MAC Address :

L1	BT MAC
L2	******
L3	-******

⑰Audyssey App Interface Ver :

L1	Audy IF
L2	
L3	**.**

1.4. Error display

See the table below for descriptions of the displayed errors and countermeasures for these.
If multiple errors occur, only one item is displayed.
The priority order is ②, ③, ④, ⑤, ⑥, ①.

Condition	States	Display	TROUBLE SHOOTING
① Firm Check NG	The model name, brand name and region information written in the firmware are compared to the region settings in the PCB. This error is displayed if the information does not match. " ▲ " is displayed as the first character if the firmware is not correct (see the illustrations on the right).	L1 FIRM L2 ERROR L3 L1 M:******▲ L2 ******** L3 BL-**.** L1 DSP ▲ L2 ******** L3 L1 A.PLD ▲ L2 L3 **.** L1 V.PLD ▲ L2 L3 **.** L1 GUI ▲ L2 L3 **.**	•Check the resistor for setting the region [R1590/R1589, DIGITAL PCB]. •Write the firmware for the correct region.
② IP SCALER NG	An error occurs in Loop back Test of the DDR memory which is performed during the initial setting of i/p Scaler(ADV8003).	L1 IP L2 SCALER L3 ERR 01	•Check the circuits around the IP SCALER [IC401, DIGITAL PCB] and DDR2 [IC402/IC403]. If there appear to be no problems, [IC401] or [IC402/IC403] is faulty.
	During the initial setting of i/p Scaler (ADV8003) , there is not the reply of the Loop back Test result of the DDR memory .	L3 ERR 02	
③ GUI Serial Flash NG	If the Main CPU version is not supported by the GUI Serial Flash (ADV8003), " ▼ " is displayed as the first character of the GUI firmware version. If GUI Serial Flash is damaged, " ▲ " is displayed as the first character.	L1 GUI VER. L2 ERROR L3	•Check the firmware version.
④ DIR NG	This error is displayed if there is no response from the DIR.	L1 DIR L2 ERROR L3 01	•Check the DIR [IC202, DIGITAL PCB] and surrounding circuits.

Condition	States	Display	TROUBLE SHOOTING
⑤ DSP NG	Boot error 1 (After reset the DSP, DSP_Flag0 port is "**Low**")	L1 DSP L2 ERROR L3 01	•Check the DSP [IC251, DIGITAL PCB] and surrounding circuits.
	Boot Error 2 (After reset the DSP, MCU received state error command)	L3 02	
	Signal Detect Error (No response after input set for 1sec)	L3 03	
	Mode Change Error (No response after mode change for 1sec)	L3 04	
	Invalid situation (Detecting invalid situation with autodetect)	L3 05	
	Busy Error ("**Busy**" port remains "**Low**" for 1sec)	L3 06	
	Output Fs Error (Fs status between MCU output and actual DSP is different)	L3 07	
	Input Fs Error (Fs status between AutoDetect Msg and ACCN Msg is different)	L3 08	
	SPI communication error	L3 09	
⑥ EEPROM NG	An error occurred in a checksum of the EEPROM(*** is a block address number).	L1 BACKUP L2 ERROR L3 ***	

1.5. Version Display in the Setup Menu

Follow the steps below to display the firmware information.

(1) Press the "**SETUP**" button on the remote control.
(2) Select "**General** - **Information** - **Firmware**".

The version information is displayed as a 16-digit number as shown in the screenshot below.

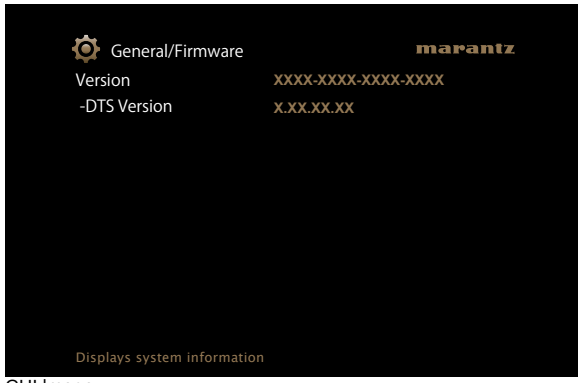

GUI Image

This 16-digit number comprises a part of the version number of each device and module.
Numerics and version numbers correspond as shown below.

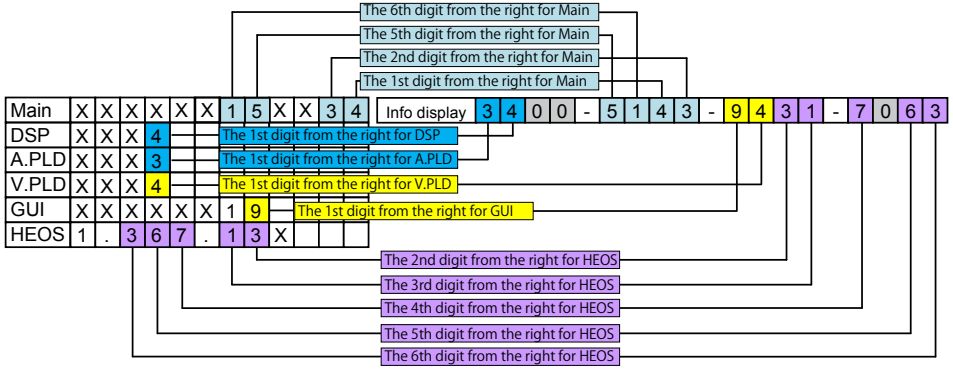

※ The firmware version numbers and this 16-digit version information are written in the Service Information.
※ Replace as follows for the 5th to 7th digits of HEOS version.

X.XXX.X → X.XXX.00X
X.XXX.XX → X.XXX.0XX
X.XXX.XXX → X.XXX.XXX

2. PANEL / REMOTE LOCK Selection Mode

2.1. Actions

Switch the PANEL LOCK and REMOTE LOCK modes between on and off.

2.2. Starting up

While holding down buttons "**M-DAX**" and "**DIMMER**" simultaneously, press the power button to turn on the power.
Select the desired mode using the "**TUNER PRESET CH+/-**" button, then press the "**STATUS**" button to confirm.

2.3. Displaying and Selecting Each Mode

The information shown on the display switches each time the "**TUNER PRESET CH+/-**" button is pressed.
Press the "**STATUS**" button to set the currently displayed mode and restart the device.
The setting with "*" is selected for each mode.

①

L1	P/V LOCK
L2	*On
L3	

The buttons on the unit and the master volume knob does not function.

↓

②

L1	FP LOCK
L2	On
L3	

The buttons on the unit does not function.

↓

③

L1	FP LOCK
L2	*Off
L3	

The PANEL LOCK mode is turned off.

↓

④

L1	RC LOCK
L2	On
L3	

The device cannot be operated by the remote control.

↓

⑤

L1	RC LOCK
L2	*Off
L3	

The REMOTE LOCK mode is turned off.

3-1. Selecting the Mode for Service-related

3-1.1. Actions

Select diagnostic mode (service path check mode), protection history display mode, 232C standby clear mode, Operation Info mode, TUNER STEP mode or Remote ID Setup Mode.

3-1.2. Starting up

While holding down buttons "**ZONE2 SOURCE**" and "**STATUS**" simultaneously, press the power button to turn on the power.
Select the desired mode using the "**TUNER PRESET CH+/-**" button, then press the "**STATUS**" button to confirm.

3-1.3. Displaying and Selecting Each Mode

The information shown on the display switches each time the "**TUNER PRESET CH+/-**" button is pressed.
Press the "**STATUS**" button to set the currently displayed mode and restart the device.

①

L1	1SERVICE
L2	CHECK
L3	

Service Path Check Mode : See "DIAGNOSTIC MODE"
The Video and Audio paths can be checked.
This function is convenient for confirming problem paths in the product and checking the paths after repairing.

↓

②

L1	2PROTECT
L2	
L3	

The protection history can be checked.

↓

③

L1	3RS232C
L2	RESET
L3	

Switches from 232C standby mode to normal standby mode.

↓

④

L1	4OP INFO
L2	
L3	

Operation Info for the unit can be checked.

↓

⑤U and N model only

L1	5TUNER
L2	FREQ
L3	

Enables reception STEP of the ANALOG TUNER to be changed.

3-1.4. Canceling the selected mode

Press the power button to turn off the power.

3-2. Protection History Display Mode

3-2.1. Actions

This mode enables the unit to record and display the event when the THERMAL, ASO or DC protection is activated.
If protections have been activated multiple times, the latest protection operation is recorded.

3-2.2. Starting up

While holding down buttons "**ZONE2 SOURCE**" and "**STATUS**" simultaneously, press the power button to turn on the power.
Select the "**2PROTECT**" using the "**TUNER PRESET CH+/-**" button, then press the "**STATUS**" button then to confirm.

3-2.3. Protection information and displays

- Press the "**STATUS**" button in Protection History Display Mode.
- The protection history can be checked.

(1) If no protections has occurred.

L1	PROTECT
L2	HISTORY
L3	:NO

(2) ASO (if the last protection is ASO)

L3	:ASO

Cause A short circuit occurred between the speaker terminals, or speakers with an impedance outside the rating were connected.
Note : Short circuits in speaker terminals or speakers can be identified.
If the power is turned on in the abnormal state, protection is activated after around 6 seconds and the power is turned off.

(3) DC (if the last protection is DC)

L3	:DC

Cause : DC output of the power amplifier is abnormal.
If the power is turned on in the abnormal state, protection is activated after around 6 seconds and the power is turned off.

(4) Case of THERMAL (when the last protection incident is THERMAL(E) protection)

L3	:THM E

Cause : Abnormal heat sink temperature.
If the power is turned on in the abnormal state, protection is activated after around 6 seconds and the power is turned off.

(5) Case of CURRENT (when the last protection incident is CURRENT protection)

L3	:CURRENT

Cause : An over current flowed in power amp.
If the power is turned on in the abnormal state, protection is activated after around 90 seconds and the power is turned off.

Caution : These protections may also be activated due to other factors such as disconnection of connectors or operations around the microcomputer.
After viewing the above protection history, press the "**STATUS**" button to return to the normal display.

3-2.4. Clearing the Protection History

There are two ways to clear the protection history.

(1) Activate Protection History Display Mode. Press the "**STATUS**" button to display the protection history. Press and hold the "**DIMMER**" button for 3 seconds.

L1	PROTECT
L2	HISTORY
L3	:DC

Press and hold the "**DIMMER**" button for 3 seconds.

↓

L3	CLEAR

The above message is displayed and the protection history is cleared.

↓

L3	:NO

(2) Initialize this unit. (See "Initializing this Unit")

※ Use the method in **3-2.4. (1)** if you do not want to erase your settings from this unit.

Warning Displays by POWER LED

If the power is turned Off while a protection is being detected, the POWER LED flashes in red to warn you depending on the protection status as follows.

(1) ASO/DC protection: Flashes at 0.5-second intervals (0.25 seconds lit, 0.25 seconds unlit)
(2) THERMAL(E) protection: Flashes at 2-second intervals (1 seconds lit, 1 seconds unlit)
(3) CURRENT protection: Flashes at 4-second intervals (2 seconds lit, 2 seconds unlit)

3-3. 232C Standby Clear Mode

3-3.1. Actions

Switches from 232C standby mode to normal standby mode.

3-3.2. Starting up

While holding down buttons "**ZONE2 SOURCE**" and "**STATUS**" simultaneously, press the power button to turn on the power.
Select the "**3RS232C RESET**" using the "**TUNER PRESET CH+/-**" button, then press the "**STATUS**" button then to confirm.

L1	3RS232C
L2	RESET
L3	

3-4. Operation Info Mode

3-4.1. Actions

This mode enables the unit to display the accumulated operating time, power On count and each protection count.

3-4.2. Starting up

While holding down buttons "**ZONE2 SOURCE**" and "**STATUS**" simultaneously, press the power button to turn on the power.
Select the "**4OP INFO**" using the "**TUNER PRESET CH+/-**" button, then press the "**STATUS**" button then to confirm.

3-4.3. Operations

Press the "**STATUS**" button after starting up this device in Operation Info mode.
The following information is displayed in the following order.

(1) Accumulated operating time

L1	Operate
L2	Time:
L3	_____H

↑ Time display
"**STATUS**"

(2) Power On time

L1	Power On
L2	Time:
L3	_____

↑ Time display
"**STATUS**"

(3) DC / ASO Protection count

L1	Protect
L2	DC:___
L3	ASO:___

"**STATUS**"

(4) Thermal Protection (E) count

L1	Protect
L2	TH E:___
L3	

"**STATUS**"

(5) Current Protection count

L1	Protect
L2	Current:
L3	___

"**STATUS**"

(Returns to normal display)

3-5. TUNER STEP mode (U / N only)

3-5.1. Actions

This is a special mode for enabling reception STEP of the ANALOG TUNER to be changed.

3-5.2. Starting up

While holding down buttons "**ZONE2 SOURCE**" and "**STATUS**" simultaneously, press the power button to turn on the power.
Select the "**5TUNER FRQ SET**" using the "**TUNER PRESET CH+/-**" button, then press the "**STATUS**" button then to confirm.

3-5.3. Displays

Start up this unit in TUNER STEP mode, select the desired option using the "**TUNER PRESET CH+/-**" button, then enter using the "**STATUS**" button.
The following information is displayed in the following order.

(1) AM9 kHz / FM50 kHz is selected

L1	TunerFRQ
L2	AM9/
L3	FM50

"**TUNER PRESET CH+**" ↓↑ "**TUNER PRESET CH-**"

(2) AM10 kHz / FM200 kHz is selected

L1	TunerFRQ
L2	AM10/
L3	FM200

↓ "**STATUS**"

(3) Press the power button to turn off the power.
(4) Press the power button to turn on the power.

4. Protection Pass Mode

4.1. Actions

- This mode allows the power to be turned on without activating protections.
- This mode functions in the same way as normal power-on, except that protections are not activated.
- When using the protection pass mode, do not connect speakers to the speaker terminals.

4.2. Operations

While holding down buttons "**DIMMER**", "**STATUS**" and "**SOUND MODE**" simultaneously, press the power button to turn on the power.

The device returns to the normal display message after the following is displayed.

L1	Protect
L2	Pass
L3	

This is displayed for 5 seconds before returning to the normal display.

5. Network Initialization Mode

5.1. Actions

The following items are initialized.

(1) Network setup
(2) Friendly Name
(3) Auto Update setting
(4) Allow Update setting
(5) Time Zone setting
(6) Queue list
(7) Internet Radio recently played station
(8) Quick Select playback station
(9) AirPlay Password
(10) Bluetooth Pairing History
(11) Crestron Connected Setup

5.2. Operations

When the power is on and the input source is HEOS Music, press and hold the "**TUNER PRESET CH -**" and "**DIMMER**" buttons for more than 3 seconds.

Initializing Display

L1	Network
L2	Reset...

Complete Display

L1	Complete

This is displayed for 5 seconds before returning to the normal display.

6. Clearing the Operation Info

6.1. Actions

• Displays the accumulated operating time of the unit, the number of times the power was switched on, and the number of occurrences of each protection.

6.2. Operations

Remove all input/output terminals and the AC plug.
Connect the AC plug again and place the product in standby mode.
While holding down buttons "**TUNER PRESET CH +**" and "**DIMMER**" simultaneously, press the power button to turn on the power.

L1	PRODUCT
L2	MODE

When "**PRODUCT MODE**" appears on the display, release the button and press the button "**power**" → "**ZONE2 ON/OFF**" to place the product in standby mode.

7. Log Capture feature

7.1. Actions

- Acquires the Network Module log.
- The log is deleted when the Network Module is deleted.
  If an error occurs, it is acquired without turning off the power of this unit.
- The log can be copied to a writable USB flash drive.
  It can also be sent to a server if this unit is connected to the Internet.
- The log is stored in the root folder of the USB flash drive with the name "**logs-<friendlyname>-<number>.tar.gz**".
  <**friendlyname**> indicates the friendly name and <**number**> indicates the sequence number.
  Previous logs on the USB flash drive are not overwritten. The log is encrypted.

7.2. Starting up

While the power is on, hold down buttons "**TUNER PRESET CH +**" and "**STATUS**" for at least 3 seconds.

7.2.1. If the USB flash drive is connected after starting the unit

(1) The log is written to the USB flash drive and "**Storing Logs...**" is displayed.
The log is also sent to the server.

L1	Storing
L2	Logs...

(2) When a log package is saved to a USB flash drive, "**USB SUCCESS**" appears in the display for 5 seconds, regardless of whether the upload to the server was successful.

L1	USB
L2	SUCCESS

(3) When saving of the log package fails, "**USB FAILED**" appears in the display for 5 seconds, regardless of whether the upload to the server was successful.

L1	USB
L2	FAILED

7.2.2. When the USB flash drive is not connected after startup, and this unit is connected to the Internet.

(1) The log is sent to the server and the display shows "**Storing Logs...**" for 5 seconds.

L1	Storing
L2	Logs...

(2) When the log package is uploaded, the ticket numbers "**No：XXXXX**" and "**Push ENTER**" are displayed until the "**Enter** or "**Back**" button of RC is pressed.

L1	No:xxxxx
L2	PushENTER

(3) If the log package upload fails, "**FAILED**" is displayed for 5 seconds.

L1	FAILED
L2	

Service Path Check Mode

1.1. Actions

This function is convenient for confirming problem paths in the product and checking the paths after repairing.
The video system, audio system and fan operation paths can be checked.
The backup data is not rewritten.

1.2. Starting up

While holding down buttons "**ZONE2 SOURCE**" and "**STATUS**" simultaneously, press the power button to turn on the power.
Select the "**1. SERVICE CHECK**" using the "**TUNER PRESET CH +/-**" button, then press the "**STATUS**" button then to confirm.
The "____" segment in L3 is lit in this mode.

L1	⁜⁜⁜⁜⁜⁜⁜⁜
L2	⁜⁜ . ⁜
L3	....

1.3. Canceling diagnostic mode

Press the power button to turn off the power.

1.4. Selecting items to check

Press the ① button to switch between video items and audio items.
Press the ② or ③ button to select the previous or next item.

	The unit			Remote control unit		
Actions	①	②	③	①	②	③
	Audio ⇔ Video ⇔ FAN	PREVIOUS	NEXT	Audio ⇔ Video	PREVIOUS	NEXT
Button	DIMMER	TUNER PRESET CH -	TUNER PRESET CH +	SLEEP	CURSOR ◄	CURSOR ►

1.5. Audio system confirmation items

See the block diagram fig.AXXth.

Paths to be confirmed			Display	Settings	What to confirm
1	Analog	fig.A01	A01ANLG ***.*dB	Input Source : CBL/SAT Input Mode : Analog (fixed) Sound mode : DIRECT Amp assign : 9.1ch Floor Layout : 5.1&SB Height Sp : 2ch Dolby Sp : None Height Layout : Front Height MAIN ZONE : On ZONE2 : Off	• Analog input ⇒ Speaker output (Front L/R) • Analog input ⇒ Pre OUT output (Front L/R) (※ The input source can be switched to any source except CBL/SAT.)

Paths to be confirmed			Display	Settings	What to confirm
2	DIGITAL (MAIN)	fig.A02a fig.A02b	A2DIG. ***.*dB	Input Source : CBL/SAT Input Mode : DIGITAL (fixed) Sound mode : MULTI CH STEREO Amp assign : 9.1ch Floor Layout : 5.1&SB Height Sp : 2ch Dolby Sp : None Height Layout : Front Height Speaker Select : Floor Speaker Config ALL Speaker = Small / SW = Yes(2ch) MAIN ZONE : On ZONE2 : Off	• Digital input ⇒ Speaker output (Front L/R, Center, Surround L/R, S.Back L/R) • Digital input ⇒ Pre OUT output (Front L/R, Center, Surround L/R, S.Back L/R, Subwoofer1/2) (※ The input source can be switched to any source except CBL/SAT.)
3	DIGITAL (ZONE2)	fig.A03a fig.A03b fig.A03c	A03Z2DIG ***.*dB	Input Source : HEOS Music Input Mode : Auto Sound mode : STEREO Amp assign : 7.1ch + ZONE2 Floor Layout : 5ch Height Sp : 2ch Dolby Sp : None Height Layout : Front Height MAIN ZONE : On ZONE2 : On	• Digital(PCM) input ⇒ Speaker output (Height2 (ZONE2) L/R) • Digital(PCM) input ⇒ Pre OUT output (ZONE2 L/R) (※ The input source can be switched to any source except HEOS Music.)
4	HDMI	fig.A04a fig.A04b fig.A04c	A05HDMI ***.*dB	Input Source : CBL/SAT Input Mode : HDMI (fixed) Sound mode : STEREO Amp assign : 9.1ch Floor Layout : 5ch&SB Height Sp : 2ch Dolby Sp : None Height Layout : Front Height MAIN ZONE : On ZONE2 : Off	• HDMI input ⇒ Speaker output (Front L/R) • HDMI input ⇒ Pre OUT output (Front L/R) (※ The input source can be switched to any source except CBL/SAT.)
5	Analog AD (MAIN ZONE)	fig.A05a fig.A05b	A06AD ***.*dB	Input Source : CBL/SAT Input Mode : Analog (fixed) Sound mode : MULTI CH STEREO Amp assign : 9.1ch Floor Layout : 5ch&SB Height Sp : 2ch Dolby Sp : None Height Layout : Front Height Speaker Select : Floor & Height Speaker Config ALL Speaker = Small/SW = Yes(2ch) MAIN ZONE : On ZONE2 : Off	• Analog input ⇒ Speaker output (Front L/R, Center, Surround L/R, S.Back L/R, Height1 L/R) • Analog input ⇒ Pre OUT output, SW(20Hz) (Front L/R, Center, Surround L/R, S.Back L/R, Height1 L/R, Subwoofer1/2) (※ The input source can be switched to any source except CBL/SAT.) (※ Volume 60 is the value when Absolute settings are used. The value is -20 when Relative settings are used)

Paths to be confirmed			Display	Settings	What to confirm
6	Analog Amp Assign (Amp Assign : ZONE2)	fig.A06	A07Z2ASS ***.*dB	Input Source : CBL/SAT Input Mode : Auto Sound mode : STEREO Z2 Source : Source Amp assign : 7.1ch + ZONE2 Floor Layout : 5ch Height Sp : 2ch Dolby Sp : None Height Layout : Front Height MAIN ZONE : On ZONE2 : On	・Analog input ⇒ Speaker output (Height2 (ZONE2) L/R) ・Analog input ⇒ Pre OUT output (ZONE2 L/R) (※ The input source can be switched to any source except CBL/SAT.) (※ Volume 60 is the value when Absolute settings are used. The value is -20 when Relative settings are used)
7	Amp Assign (Amp Assign : BiAMP)	fig.A07a fig.A07b	A11BiAMP ***.*dB	Input Source : CBL/SAT Input Mode : Auto Sound mode : MULTI CH STEREO Amp assign : 7.1ch + BiAMP Floor Layout : 5ch Height Sp : 2ch Dolby Sp : None Height Layout : Front Height MAIN ZONE : On ZONE2 : Off	・Analog input ⇒ Speaker output (Height2 L/R (Front L/R)) (※ The input source can be switched to any source except CBL/SAT.) (※ Volume 60 is the value when Absolute settings are used. The value is -20 when Relative settings are used)
8	Front Height	fig.A08a fig.A08b	A14FH ***.*dB	Input Source : CBL/SAT Input Mode : Auto Sound mode : MULTI CH STEREO Amp assign : 9.1ch Floor Layout : 5ch Height Sp : 4ch Dolby Sp : None Height Layout : Top Front & Top Rear MAIN ZONE : On ZONE2 : Off	・Analog input ⇒ Speaker output (Height1 L/R (Top Front), Height2 L/R (Top Rear)) ・Analog input ⇒ Pre OUT output (Height1 L/R (Top Front), Height2 L/R (Top Rear)) ・Pre OUT 出力 (※ The input source can be switched to any source except CBL/SAT.) (※ Volume 60 is the value when Absolute settings are used. The value is -20 when Relative settings are used)
9	7.1ch	fig.A09	A197.1IN ***.*dB	Input Source : CBL/SAT Input Mode : 7.1Ch In Amp Assign : 9.1ch Floor Layout : 5ch&SB Height Sp : None Dolby Sp : None Speaker Config ALL Speaker = Small/SW = Yes(2ch)	・7.1ch IN input ⇒ Speaker output (Front L/R, Center, Surround L/R, S.Back L/R) ・Pre OUT output (Front L/R, Center, Surround L/R, S.Back L/R, Subwoofer1/2)
10	Front Amp ⇒ Surround Back	fig.A10a fig.A10b	A20SB ***.*dB	Input Source : CBL/SAT Input Mode : Auto Sound mode : MULTI CH STEREO Amp assign : 11.1ch Height Speakers : 4Height Speakers Height Layout : Top Front & Top Rear Pre OUT Channel : Front Speaker Select : Floor & Height MAIN ZONE : On ZONE2 : Off	・Analog input ⇒ Speaker output (S.Back L/R) ・Pre OUT 出力 (※ The input source can be switched to any source except CBL/SAT.) (※ Volume 60 is the value when Absolute settings are used. The value is -20 when Relative settings are used)

1.6. Confirmation items for the video system

See the block diagram fig.VXXth.

Paths to be confirmed			Display	Settings	What to confirm
1	Analog Video pass	fig.V01	V01VIDEO ***.*dB	Input Source : CBL/SAT Video Conversion (IP Scaler) : OFF, All sources MAIN ZONE : On ZONE2 : On	• CVBS input ⇒ CVBS output • Component input ⇒ Component output (※ The input source can be switched to any source except CBL/SAT.)
2	Video Convert (Analog or HDMI ⇒ HDMI)	fig.V02a fig.V02b	V02CONV ***.*dB	Input Source : CBL/SAT Video Conversion (IP Scaler) : ON, All sources IP Scaler : "Analog & HDMI", All sources Resolution : "Auto", All sources MAIN ZONE : On MAIN ZONE : On ZONE2 : Off	• CVBS input ⇒ IP Scaler ⇒ HDMI output. • Component input ⇒ IP Scaler ⇒ HDMI output. • HDMI input ⇒ IP Scaler ⇒ HDMI output. • ETHERNET input ⇒ IP Scaler ⇒ HDMI output. (※ The input source can be switched to any source except CBL/SAT.)
3	HDMI pass (MAIN ZONE)	fig.V03	V03HDMI ***.*dB	Input Source : CBL/SAT Video Conversion (IP Scaler) : OFF, All sources MAIN ZONE : On ZONE2 : Off	• HDMI input (MAIN function) ⇒ HDMI output (MAIN) (※ The input source can be switched to any source except CBL/SAT.)
4	HDMI CEC	fig.V04	V04CEC ***.*dB	Input Source : CBL/SAT HDMI Control : On MAIN ZONE : On ZONE2 : Off	• When the power supply of a TV is put in the standby mode, make sure that the power supply of this unit is also put in the standby mode. (※ The input source can be switched to any source except CBL/SAT.) • The ARC path can also be checked (check this using the TV input source).
5	HDMI Audio (Audio : AVR)	fig.V05a fig.V05b fig.V05c	V05H-AVR ***.*dB	Input Source : CBL/SAT HDMI Control : Off HDMI Audio : AVR (if checking the audio output from AVR)	• HDMI input (PCM, DolbyDigital, DTS) ⇒ Speaker output. • HDMI input(HD audio) ⇒ Speaker output. (※ The input source can be switched to any source except CBL/SAT.)
6	HDMI Audio (Audio : TV)	fig.V06a fig.V06b	V06H-TV ***.*dB	HDMI Audio : TV (if checking the audio output from TV)	• HDMI input (PCM, DolbyDigital, DTS) ⇒ HDMI output (audio output from connected TV) (※ The input source can be switched to any source except CBL/SAT.)
7	GUI	fig.V07	V07MENU ***.*dB	Input Source : CBL/SAT Video Conversion (IP Scaler) : ON, All sources IP Scaler : "Analog & HDMI", All sources Resolution : "AUTO", All sources Setup Menu : On MAIN ZONE : On ZONE2 : Off	• GUI display ⇒ HDMI output. (※ The input source can be switched to any source except CBL/SAT.)
8	HDMI pass (MAIN ZONE2)	fig.V08	V08Z2HDM ***.*dB	Input Source : CBL/SAT ZONE2 Source : Source MAIN ZONE : On ZONE2 : On	• HDMI input (ZONE2 function) ⇒ HDMI output (ZONE2) (※ The input source can be switched to any source except CBL/SAT.)

1.7. Confirmation items for fan operation

Paths to be confirmed			Display	Settings	What to confirm
1	Low-speed fan	-	F01LOW ***.*dB	FAN CONT_LOW = HIGH FAN CONT_HIGH = LOW MAIN ZONE ON ZONE2 OFF	• Low-speed fan (※ The input source can be switched to any source except CBL/SAT.)
2	High-speed fan	-	F03HIGH ***.*dB	FAN CONT_LOW = LOW FAN CONT_HIGH = HIGH MAIN ZONE ON ZONE2 OFF	• High-speed fan (※ The input source can be switched to any source except CBL/SAT.)

fig.A01

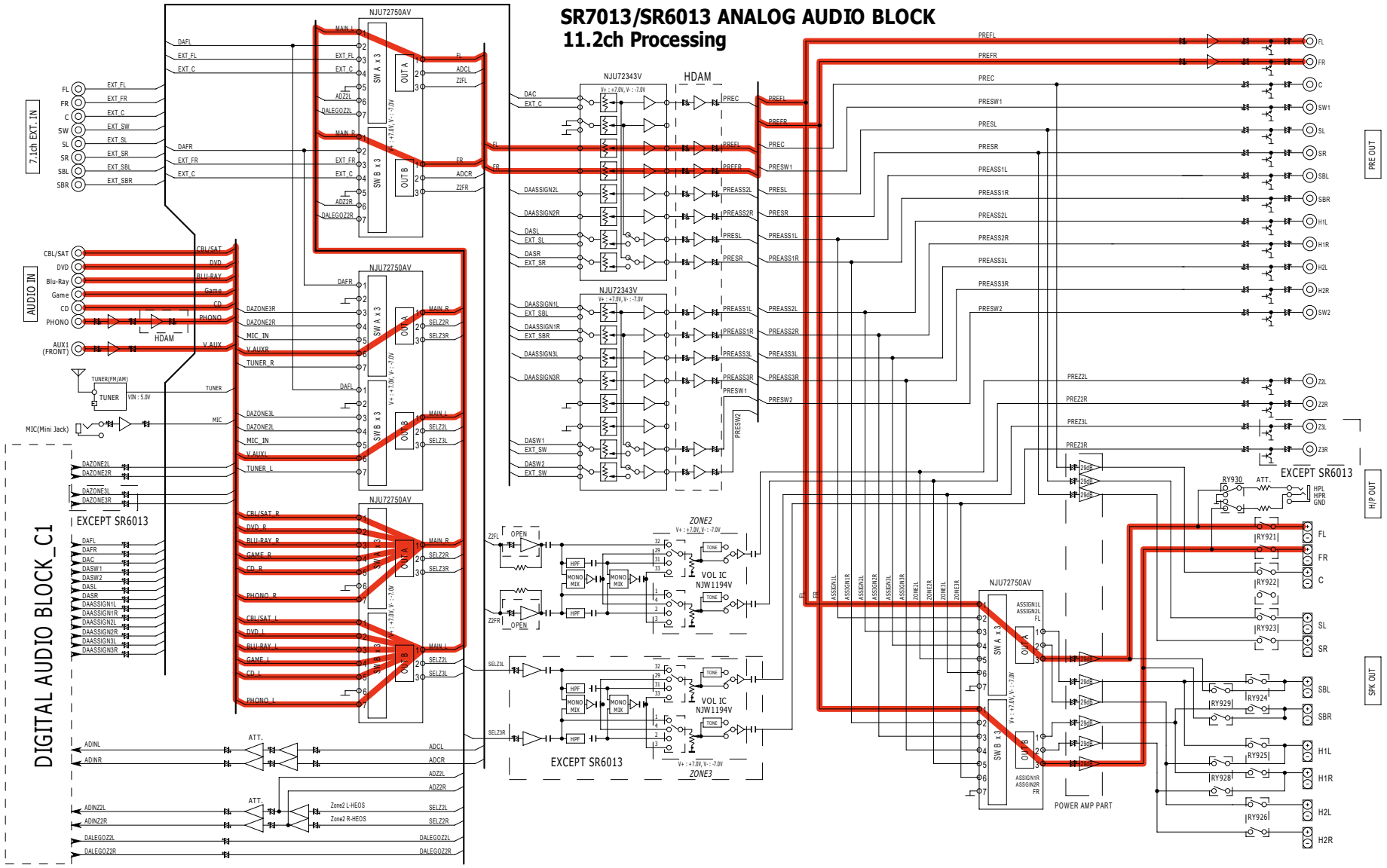
SR7013/SR6013 ANALOG AUDIO BLOCK
11.2ch Processing
DIGITAL AUDIO BLOCK_C1
7.1ch EXT. IN
AUDIO IN
NJU72750AV
NJU72343V
HDAM
EXCEPT SR6013
ZONE2
ZONE3
VOL IC NJW1194V
TUNER
MIC(Mini Jack)
POWER AMP PART
PRE OUT
SPK OUT
H/P OUT

fig.A02a

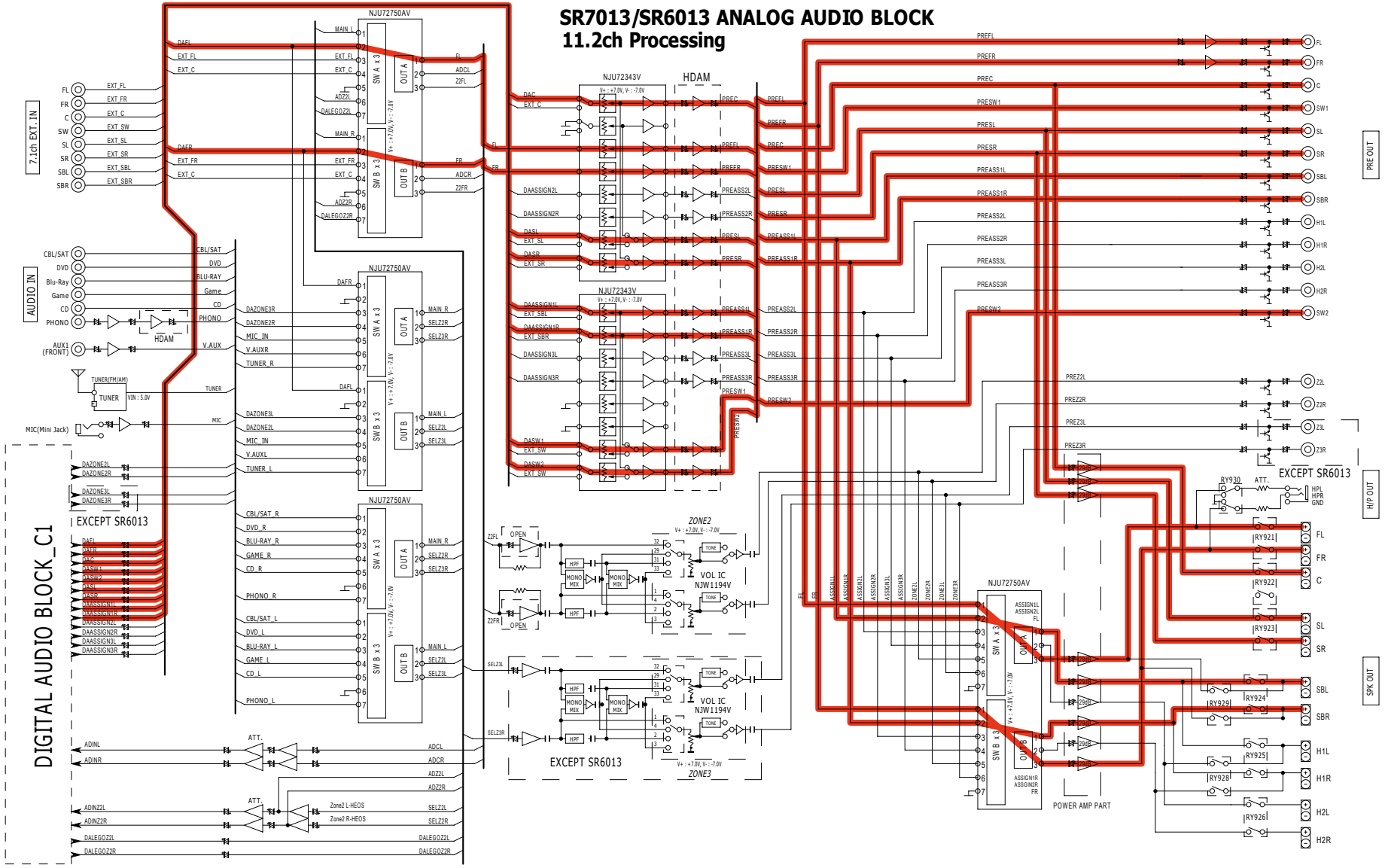
SR7013/SR6013 ANALOG AUDIO BLOCK
11.2ch Processing
DIGITAL AUDIO BLOCK_C1
7.1ch EXT. IN
AUDIO IN
NJU72750AV
NJU72343V
HDAM
TUNER
EXCEPT SR6013
ZONE2
ZONE3
VOL IC NJW1194V
POWER AMP PART
PRE OUT
HP OUT
SPK OUT

fig.A02b

SR6013 DIGITAL AUDIO BLOCK(CIRRUS)

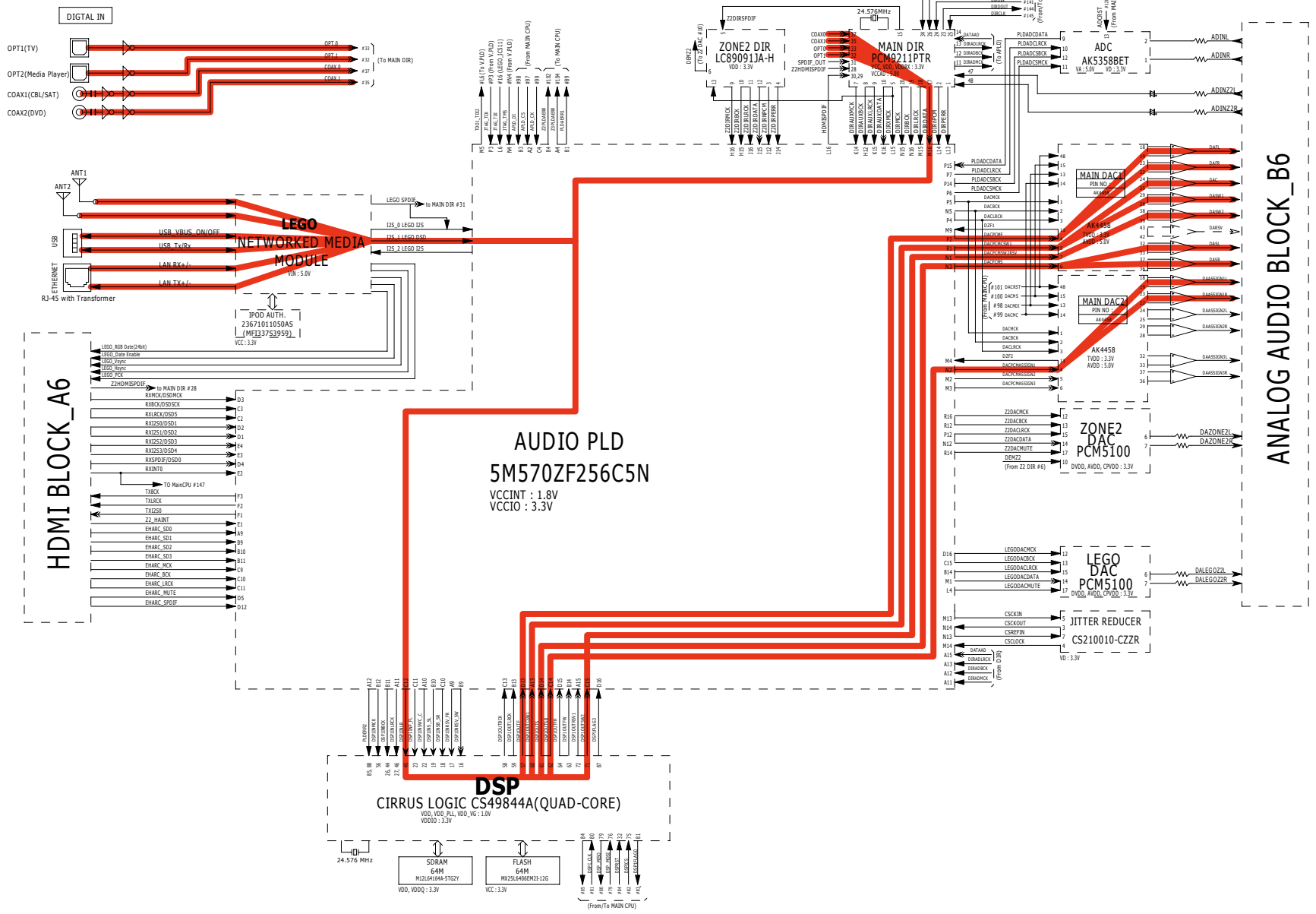

fig.A03a

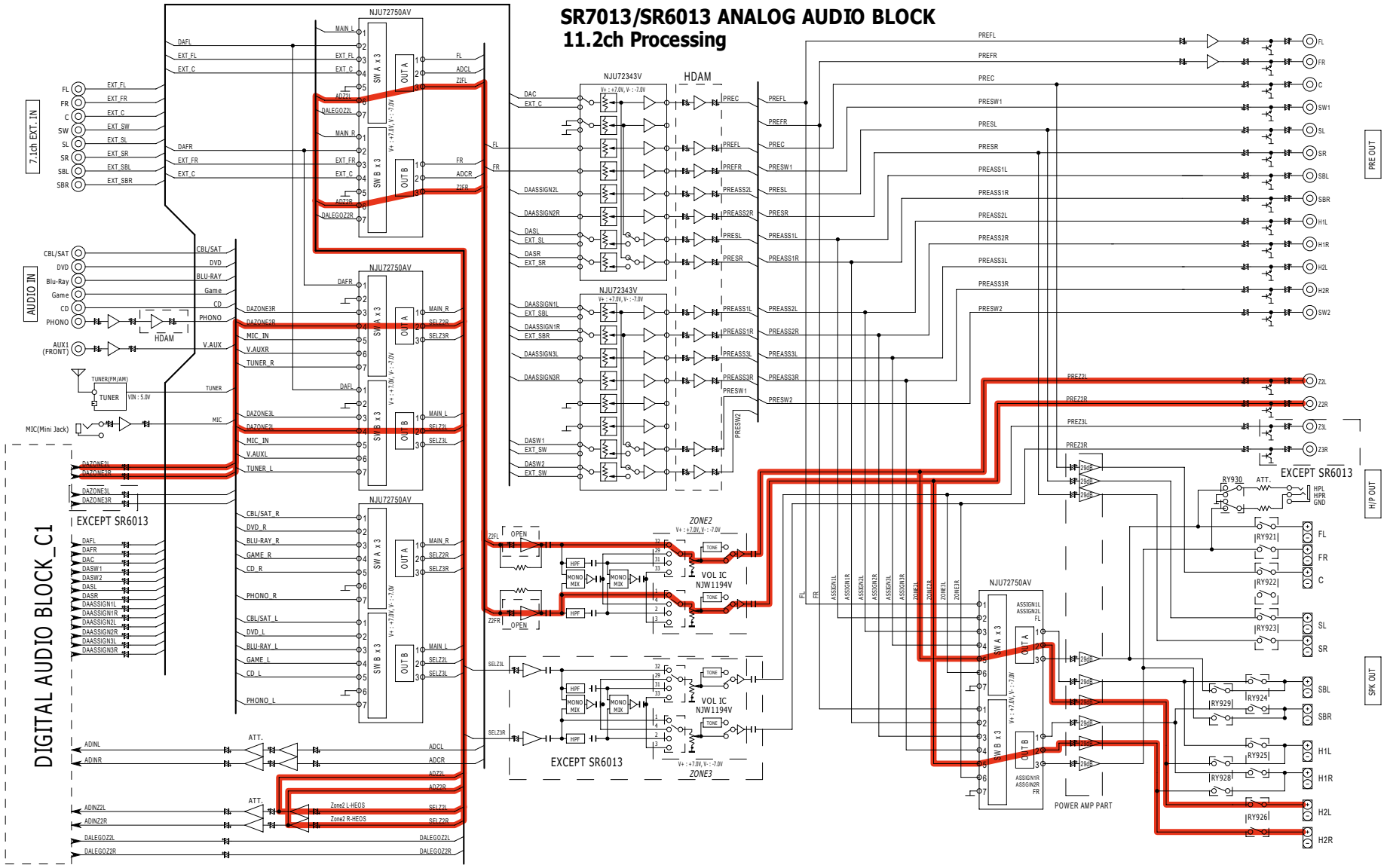
SR7013/SR6013 ANALOG AUDIO BLOCK
11.2ch Processing
DIGITAL AUDIO BLOCK_C1
7.1ch EXT. IN
AUDIO IN
NJU72750AV
NJU72343V
HDAM
VOL IC NJW1194V
ZONE2
ZONE3
EXCEPT SR6013
POWER AMP PART
PRE OUT
SPK OUT
H/P OUT

fig.A03b

SR6013 DIGITAL AUDIO BLOCK(CIRRUS)

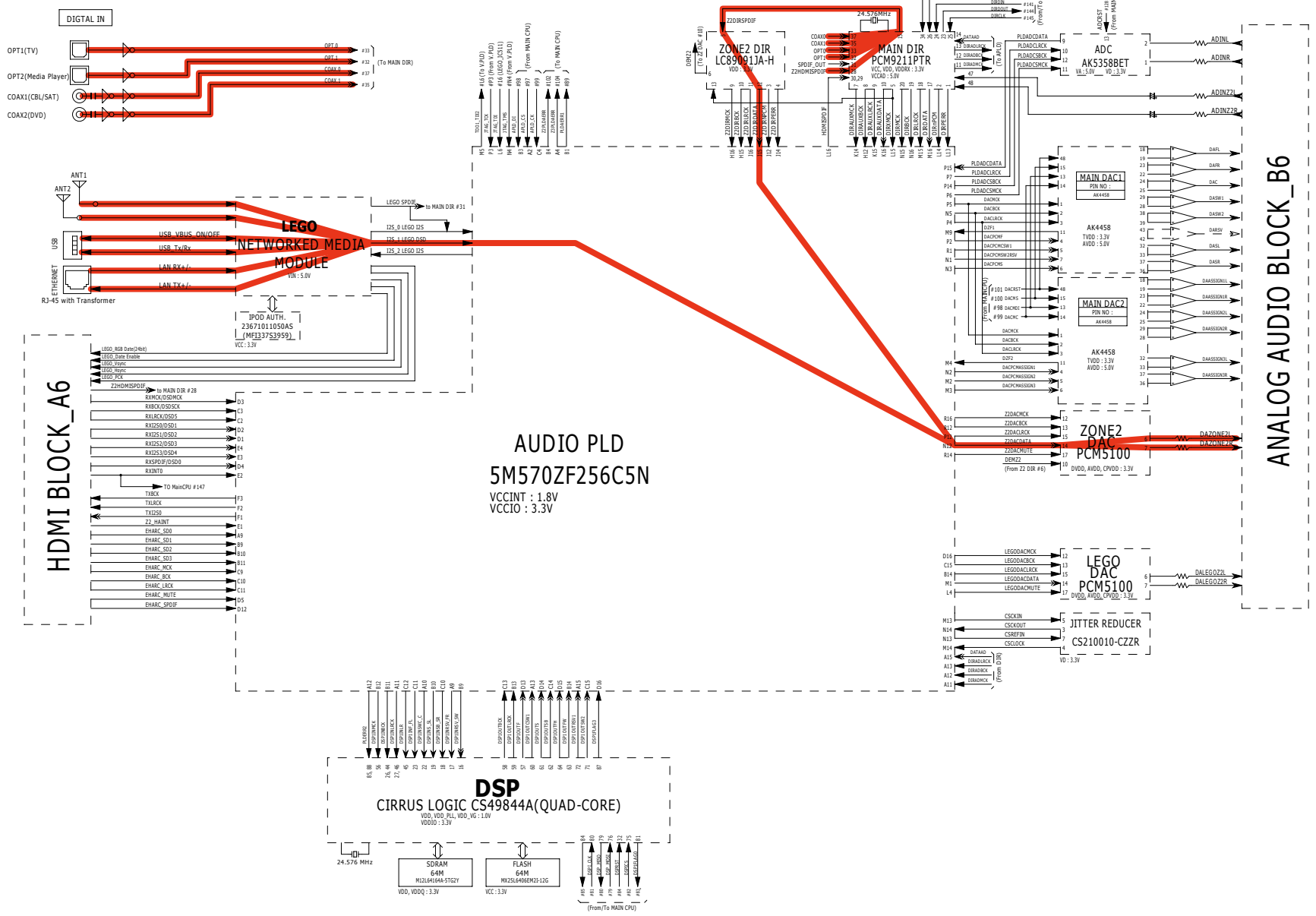

fig.A03c

SR7013/AV7705/SR6013 HDMI BLOCK

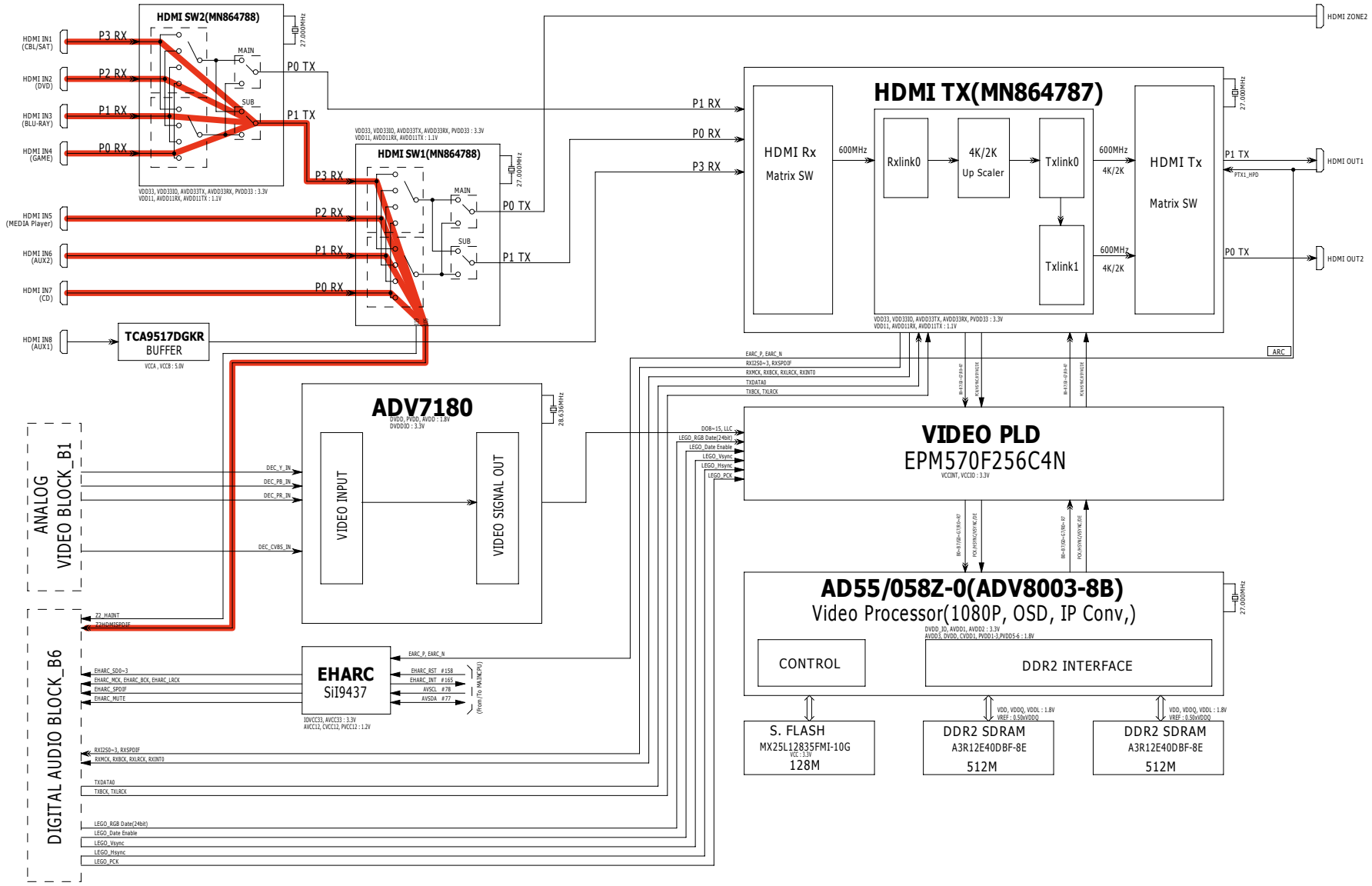

fig.A04a

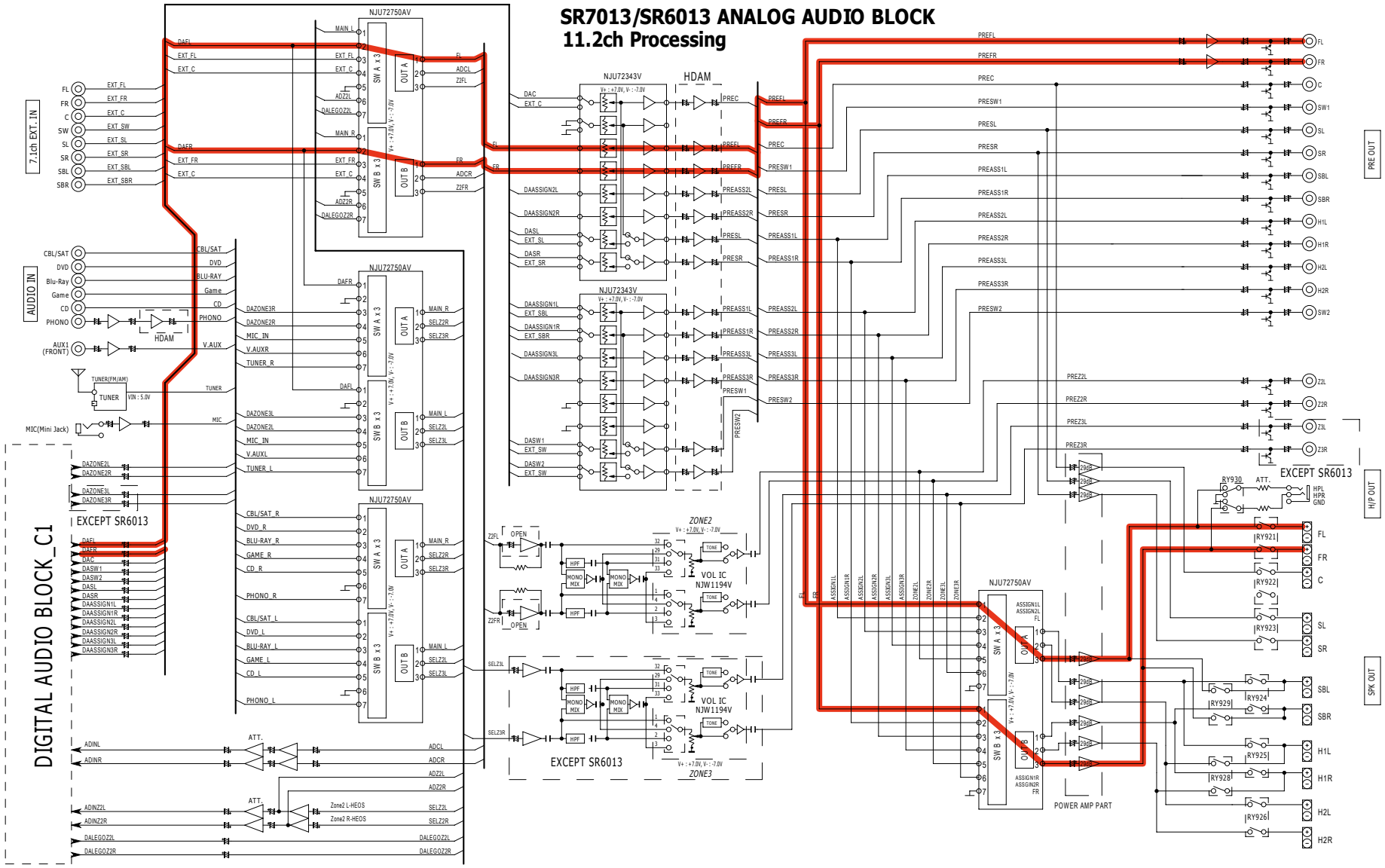
SR7013/SR6013 ANALOG AUDIO BLOCK
11.2ch Processing
DIGITAL AUDIO BLOCK_C1
7.1ch EXT. IN
AUDIO IN
EXCEPT SR6013
NJU72750AV
NJU72343V
HDAM
VOL IC NJW1194V
ZONE2
ZONE3
POWER AMP PART
PRE OUT
SPK OUT
H/P OUT
TUNER
ATT.

fig.A04b

SR6013 DIGITAL AUDIO BLOCK(CIRRUS)

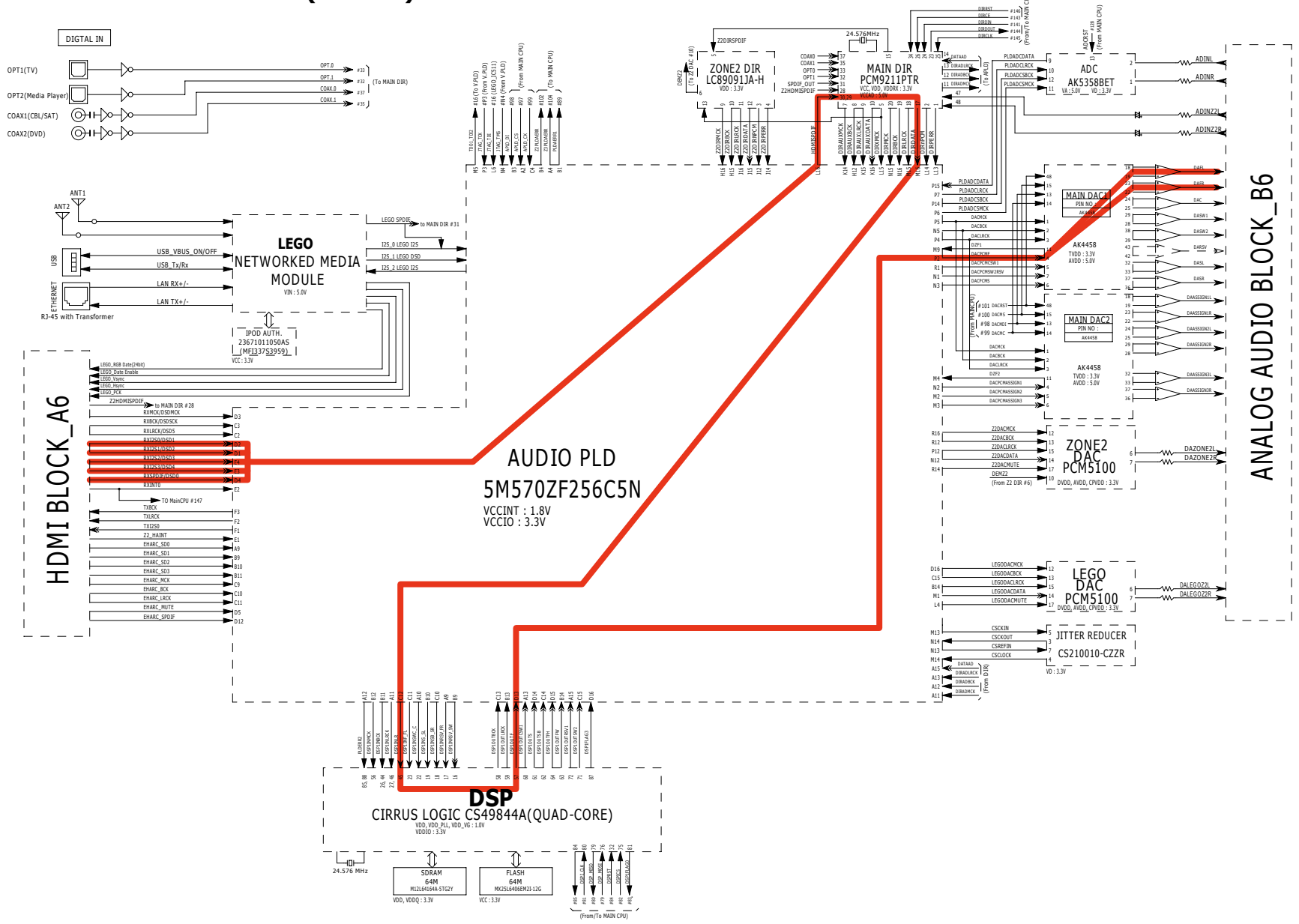

fig.A04c

SR7013/AV7705/SR6013 HDMI BLOCK

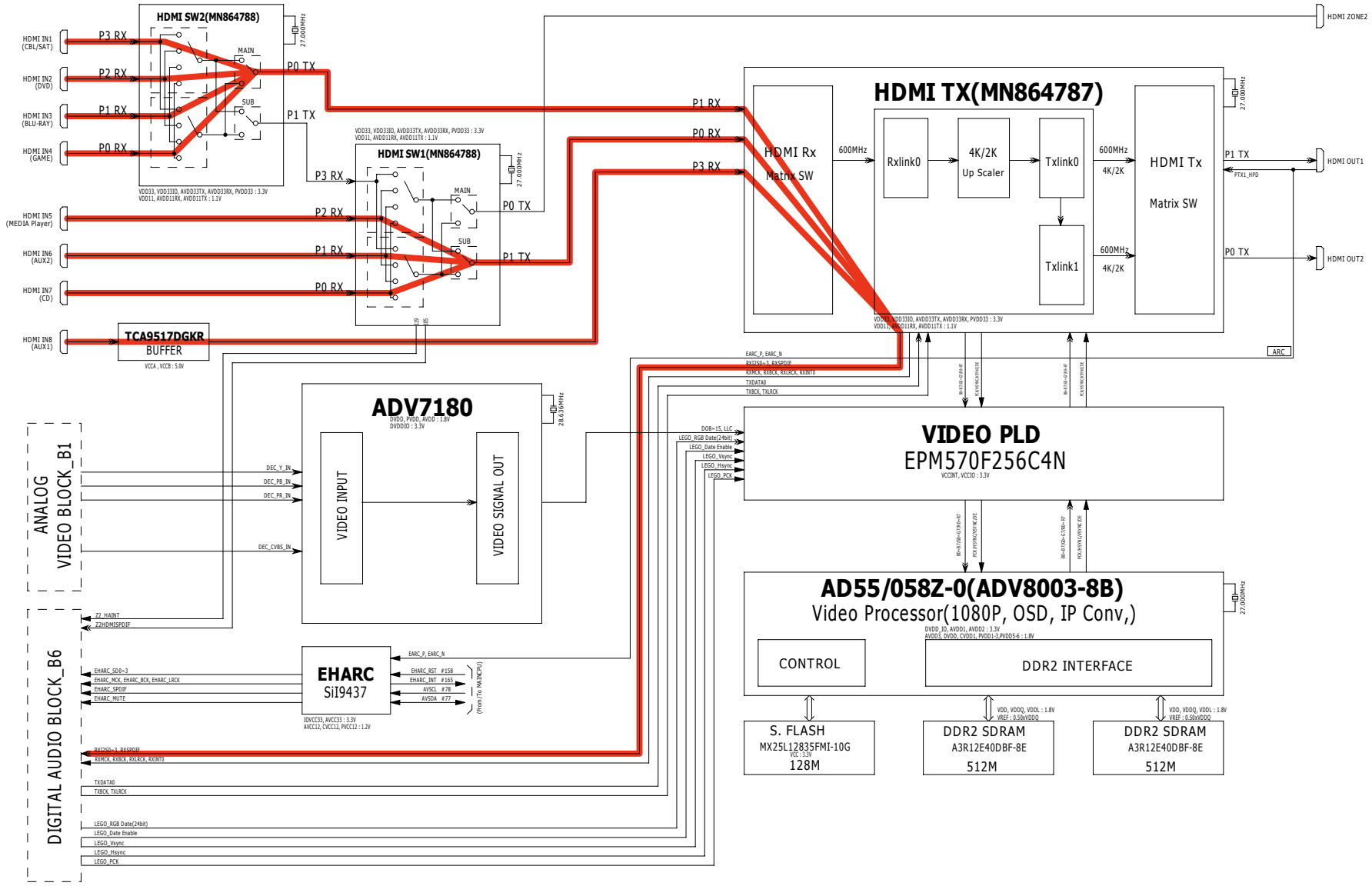

fig.A05a

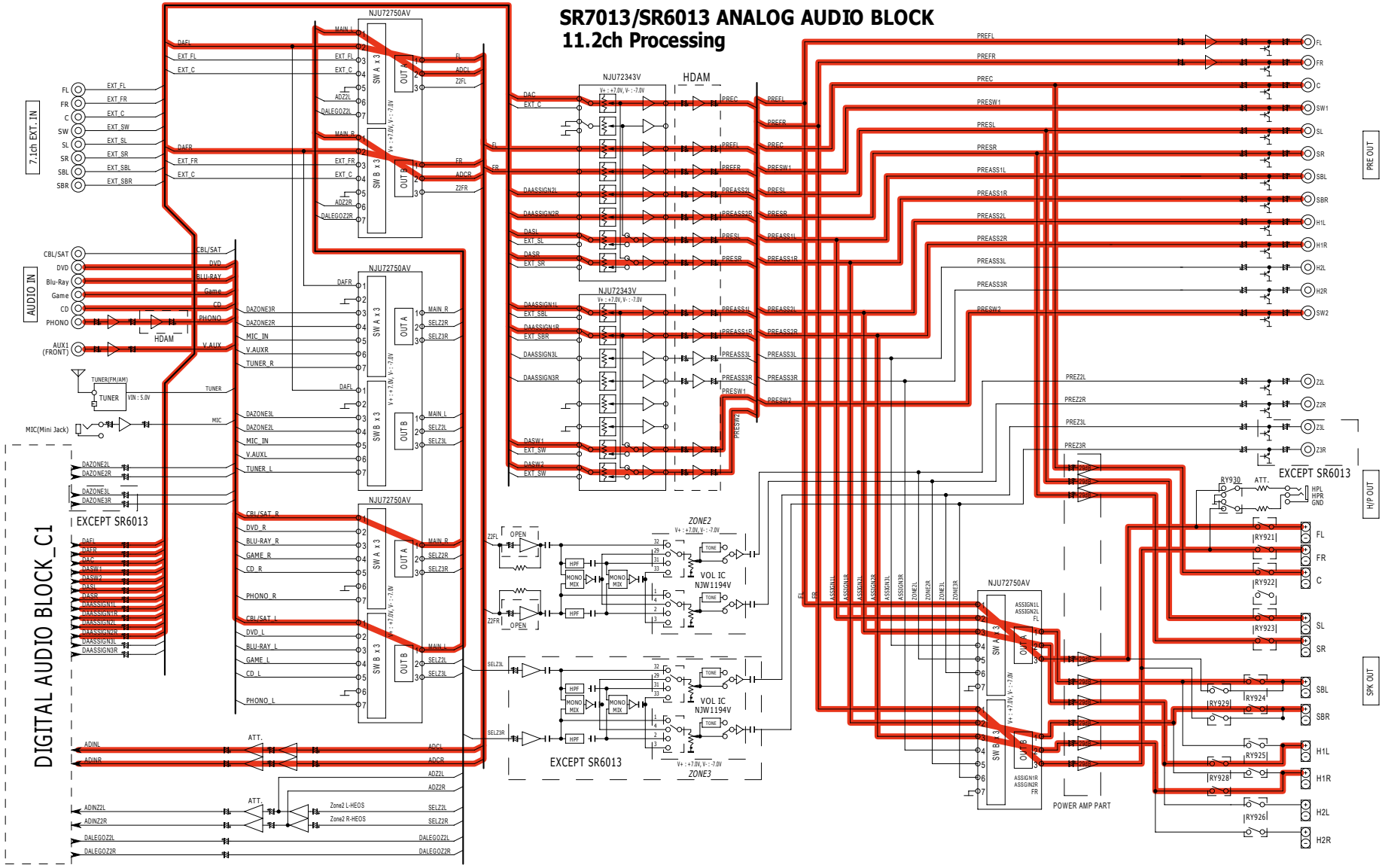
SR7013/SR6013 ANALOG AUDIO BLOCK
11.2ch Processing
DIGITAL AUDIO BLOCK_C1
7.1ch EXT. IN
AUDIO IN
HDAM
TUNER
MIC(Mini Jack)
EXCEPT SR6013
NJU72750AV
NJU72343V
VOL IC NJW1194V
ZONE2
ZONE3
POWER AMP PART
PRE OUT
SPK OUT
H/P OUT
EXCEPT SR6013

fig.A05b

SR6013 DIGITAL AUDIO BLOCK(CIRRUS)

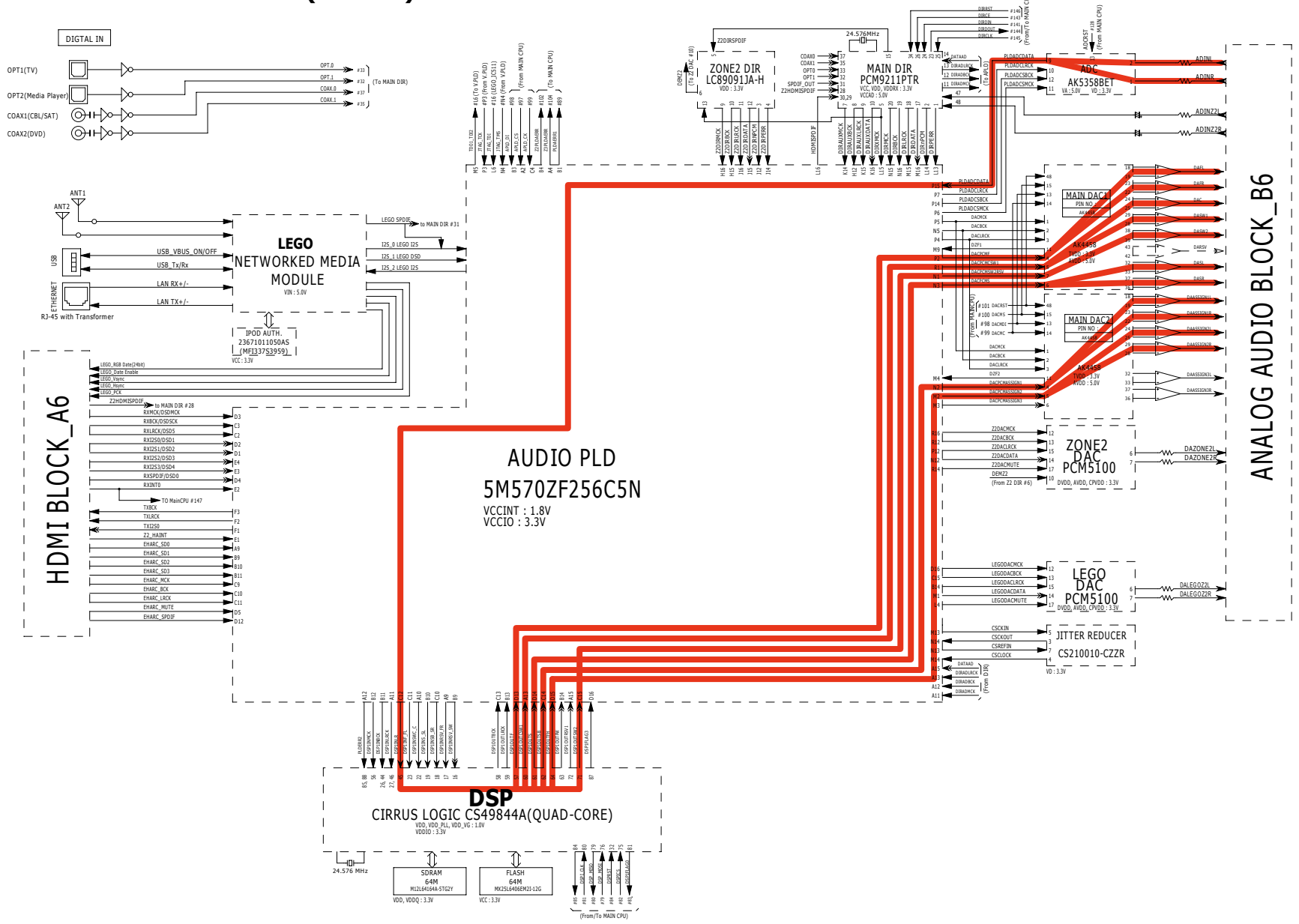

fig.A06

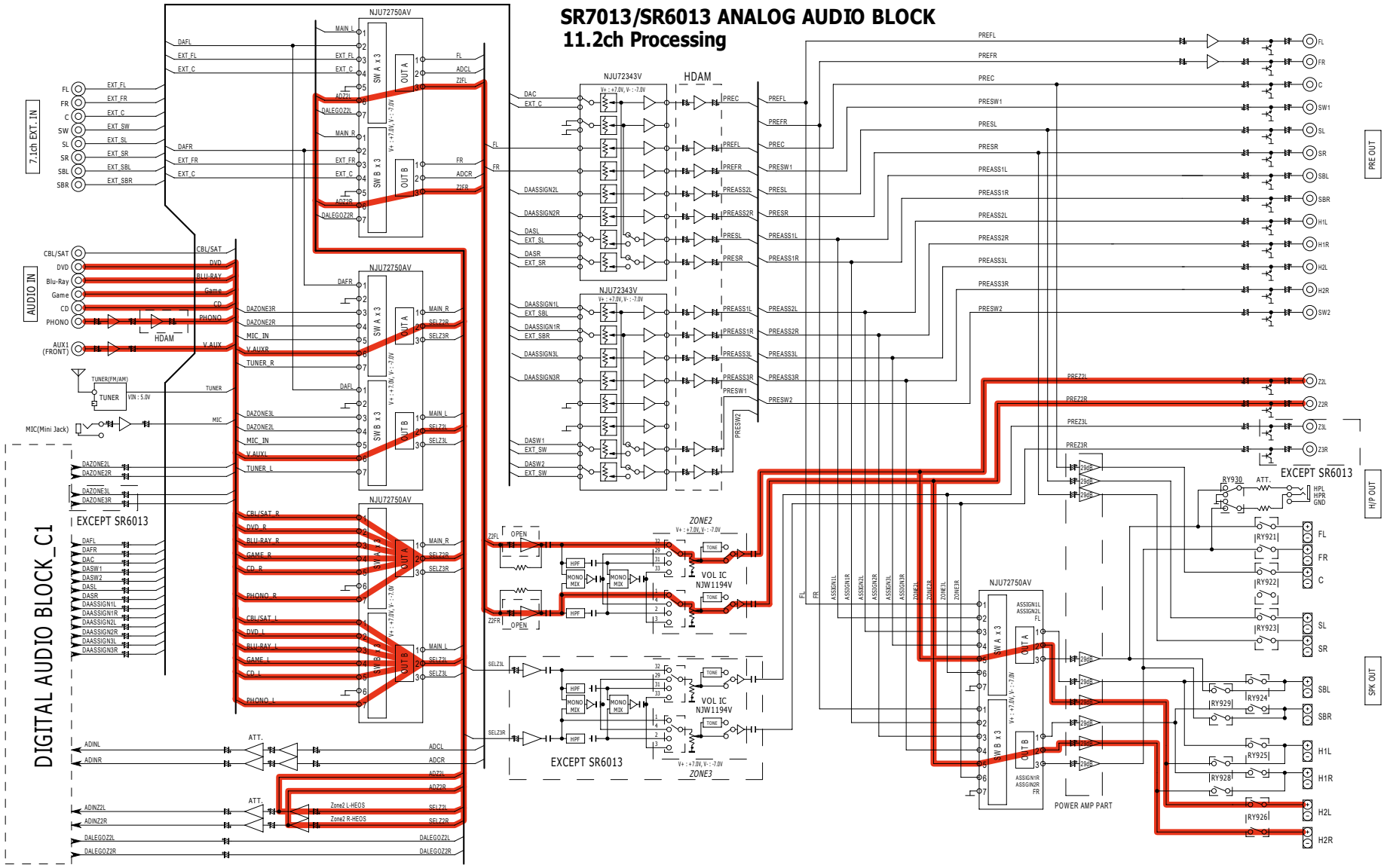
SR7013/SR6013 ANALOG AUDIO BLOCK
11.2ch Processing
DIGITAL AUDIO BLOCK_C1
7.1ch EXT. IN
AUDIO IN
NJU72750AV
NJU72343V
HDAM
TUNER
VOL IC NJW1194V
ZONE2
ZONE3
EXCEPT SR6013
POWER AMP PART
PRE OUT
SPK OUT
H/P OUT

fig.A07a

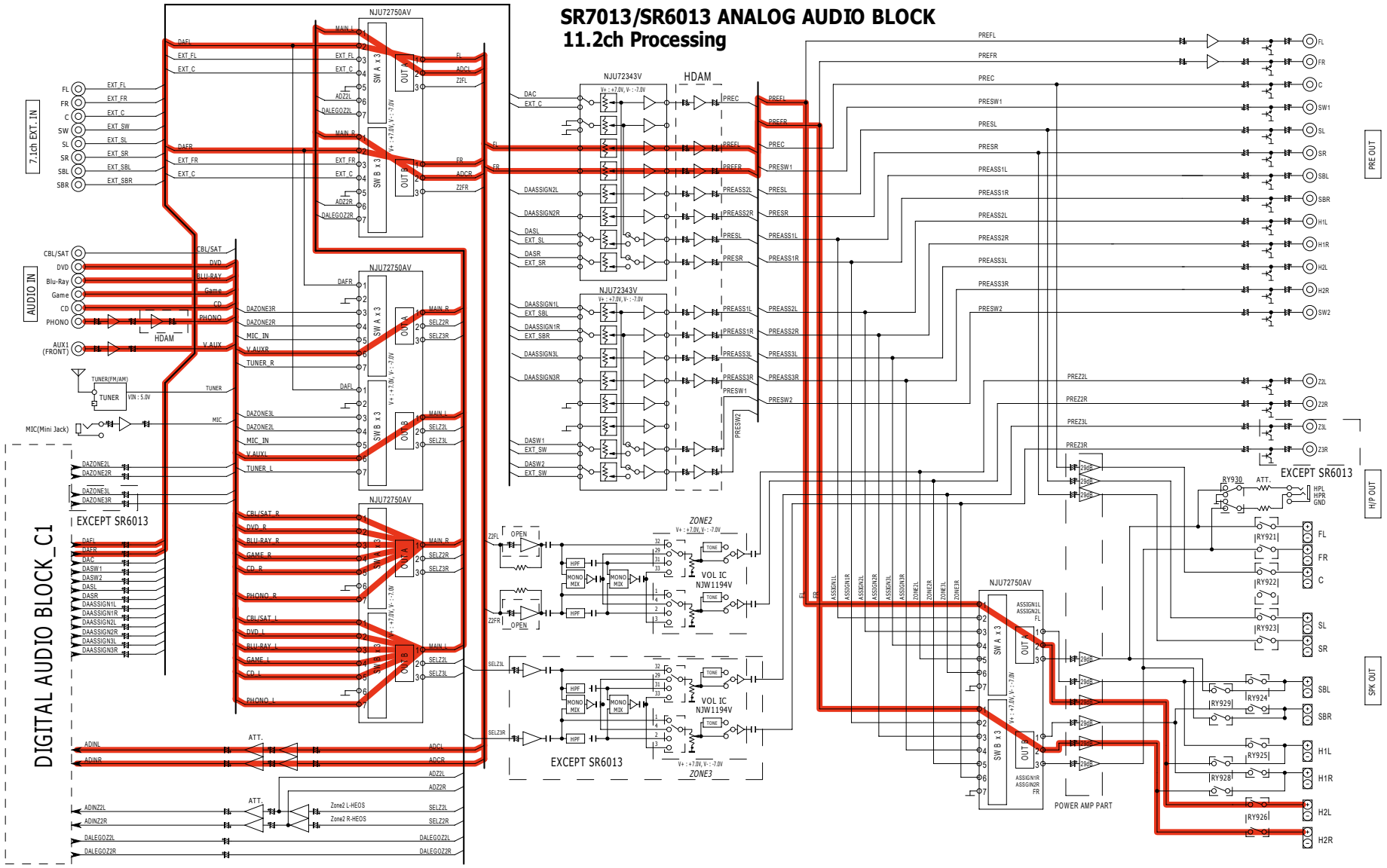
SR7013/SR6013 ANALOG AUDIO BLOCK
11.2ch Processing
DIGITAL AUDIO BLOCK_C1
7.1ch EXT. IN
AUDIO IN
NJU72750AV
NJU72343V
HDAM
TUNER
VOL IC NJW1194V
ZONE2
ZONE3
EXCEPT SR6013
POWER AMP PART
PRE OUT
H/P OUT
SPK OUT

fig.A07b

SR6013 DIGITAL AUDIO BLOCK(CIRRUS)

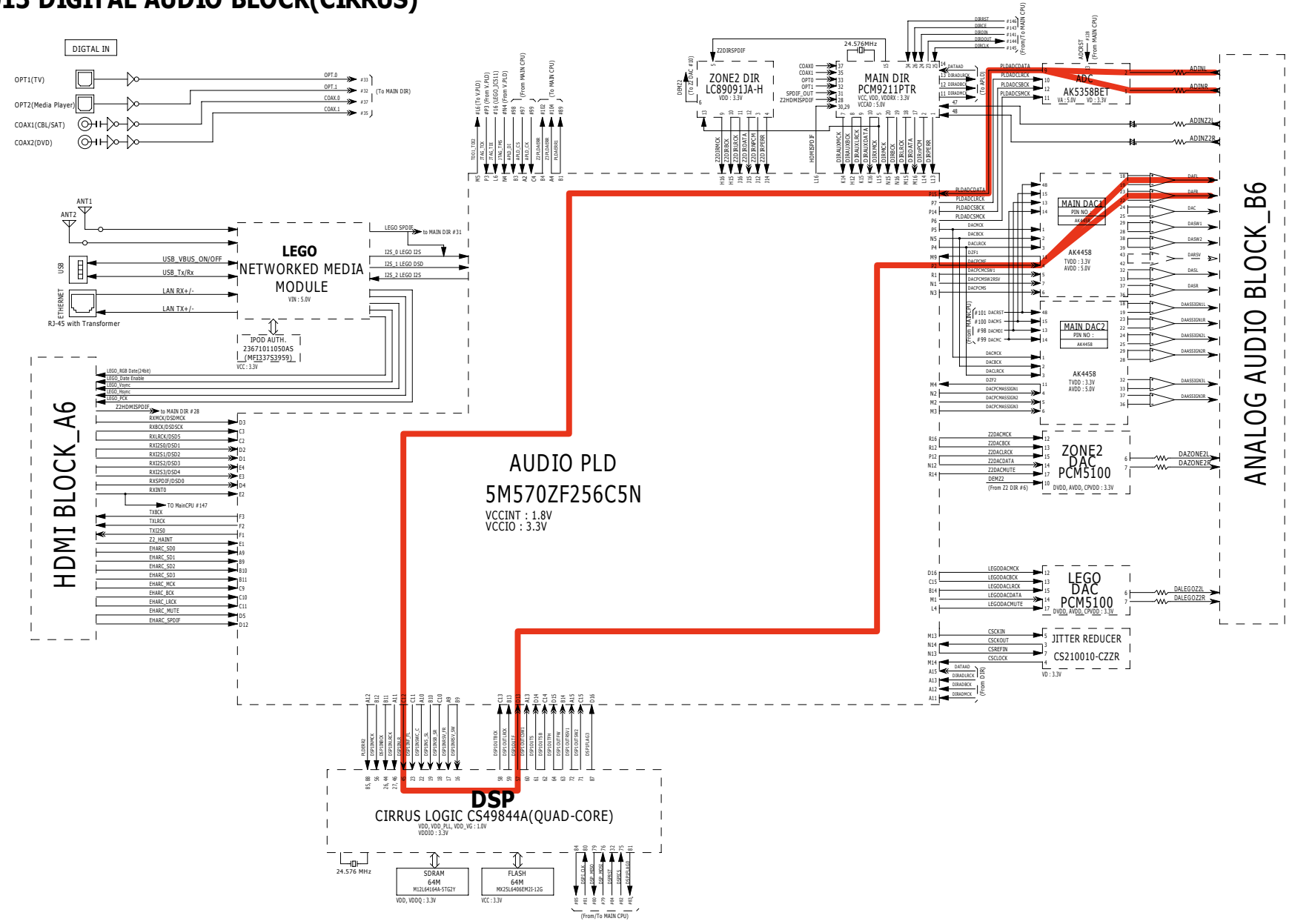

fig.A08a

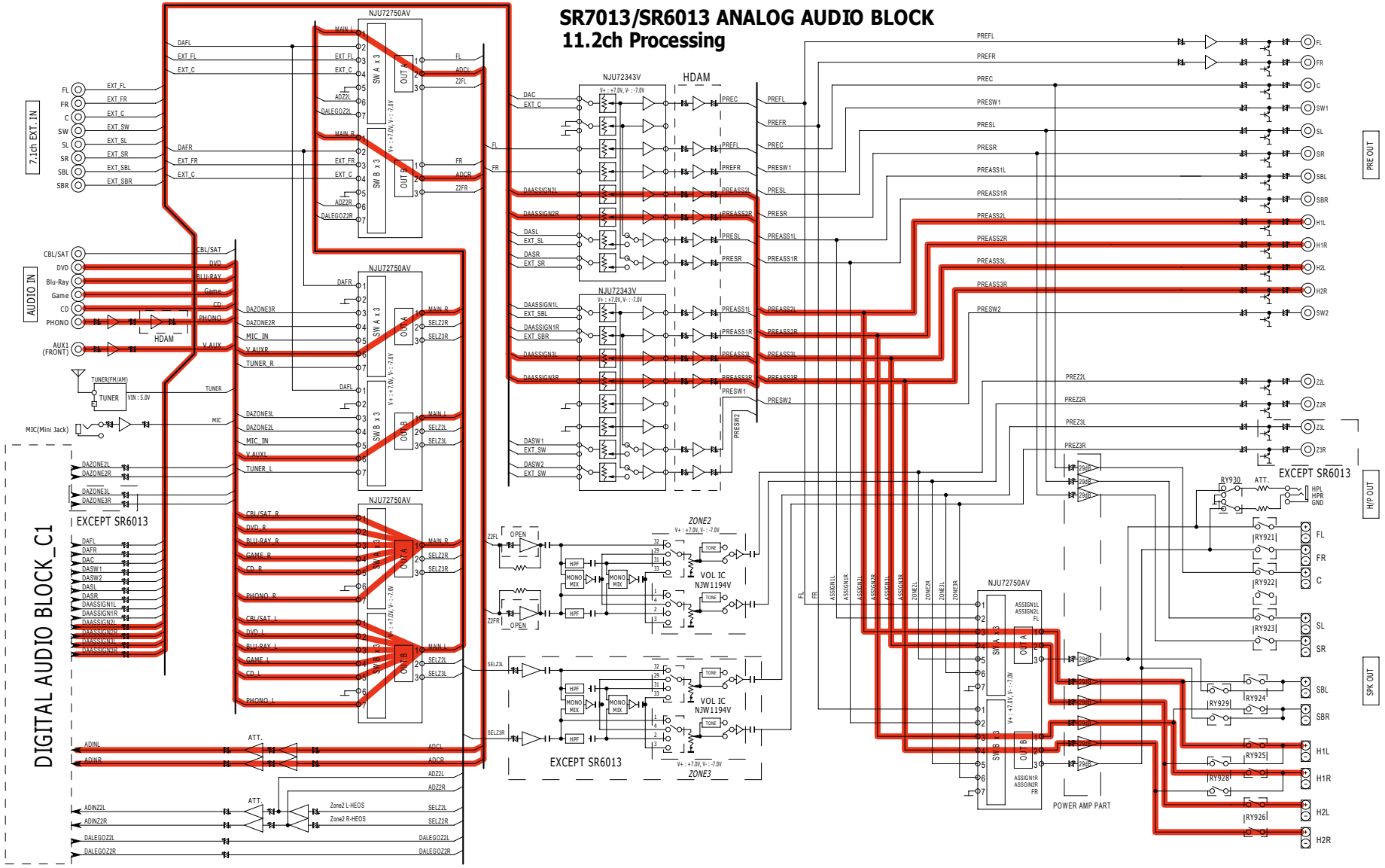
SR7013/SR6013 ANALOG AUDIO BLOCK
11.2ch Processing
DIGITAL AUDIO BLOCK_C1
7.1ch EXT. IN
AUDIO IN
NJU72750AV
NJU72343V
HDAM
VOL IC NJW1194V
ZONE2
ZONE3
EXCEPT SR6013
POWER AMP PART
PRE OUT
H/P OUT
SPK OUT

fig.A08b

SR6013 DIGITAL AUDIO BLOCK(CIRRUS)

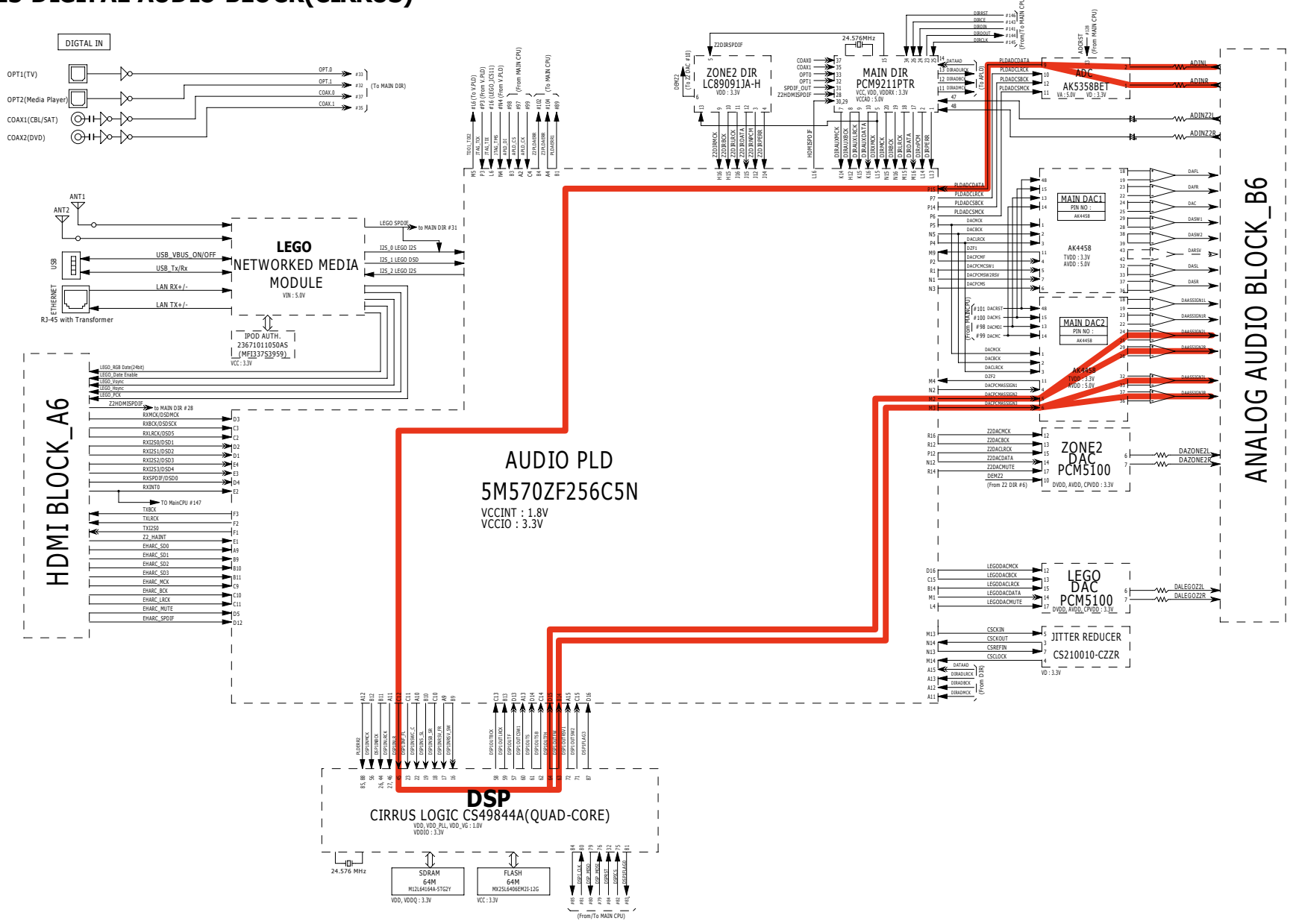

fig.A09

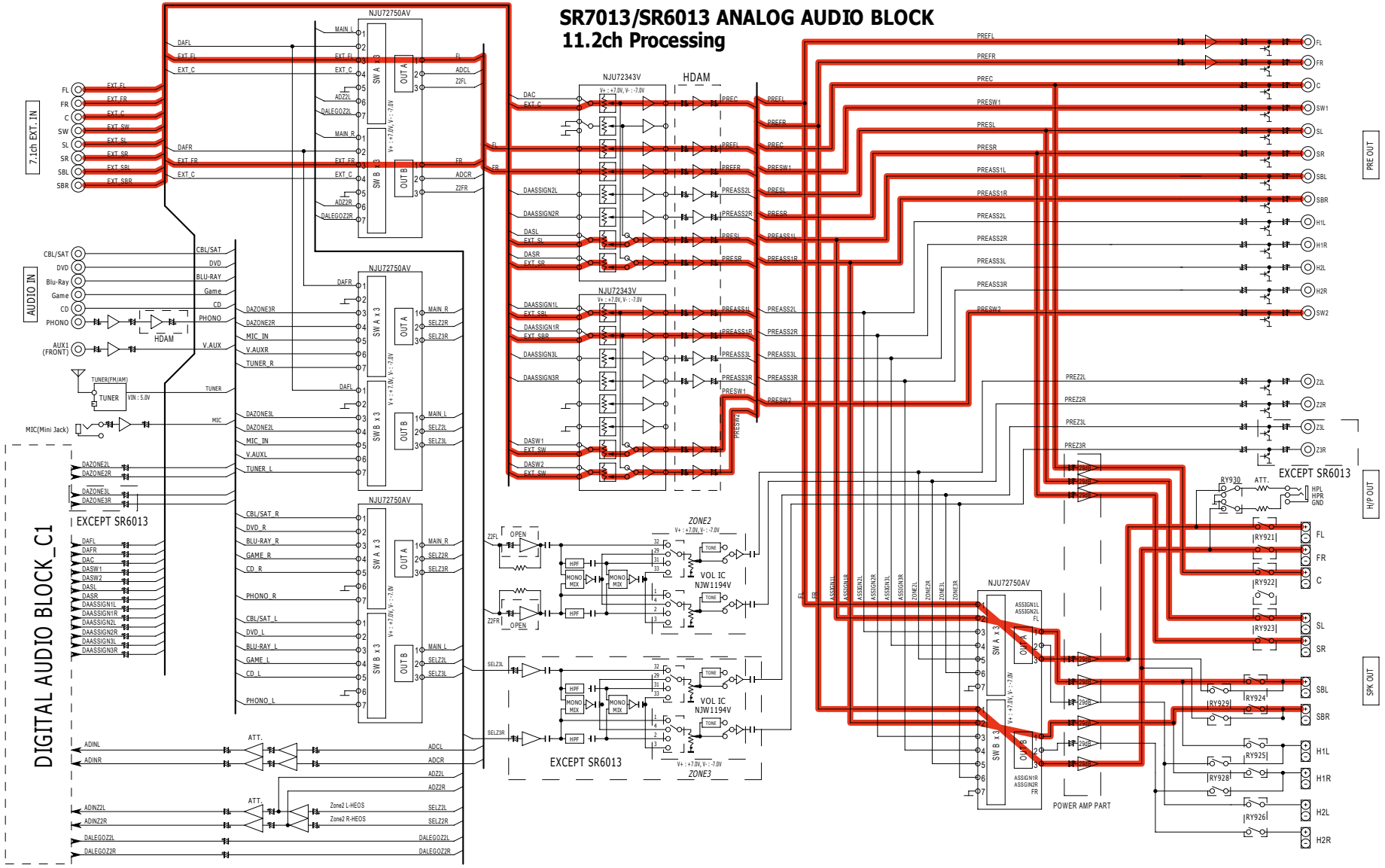
SR7013/SR6013 ANALOG AUDIO BLOCK
11.2ch Processing
DIGITAL AUDIO BLOCK_C1
7.1ch EXT. IN
AUDIO IN
NJU72750AV
NJU72343V
HDAM
VOL IC NJW1194V
ZONE2
ZONE3
EXCEPT SR6013
POWER AMP PART
PRE OUT
SPK OUT
H/P OUT

fig.A10a

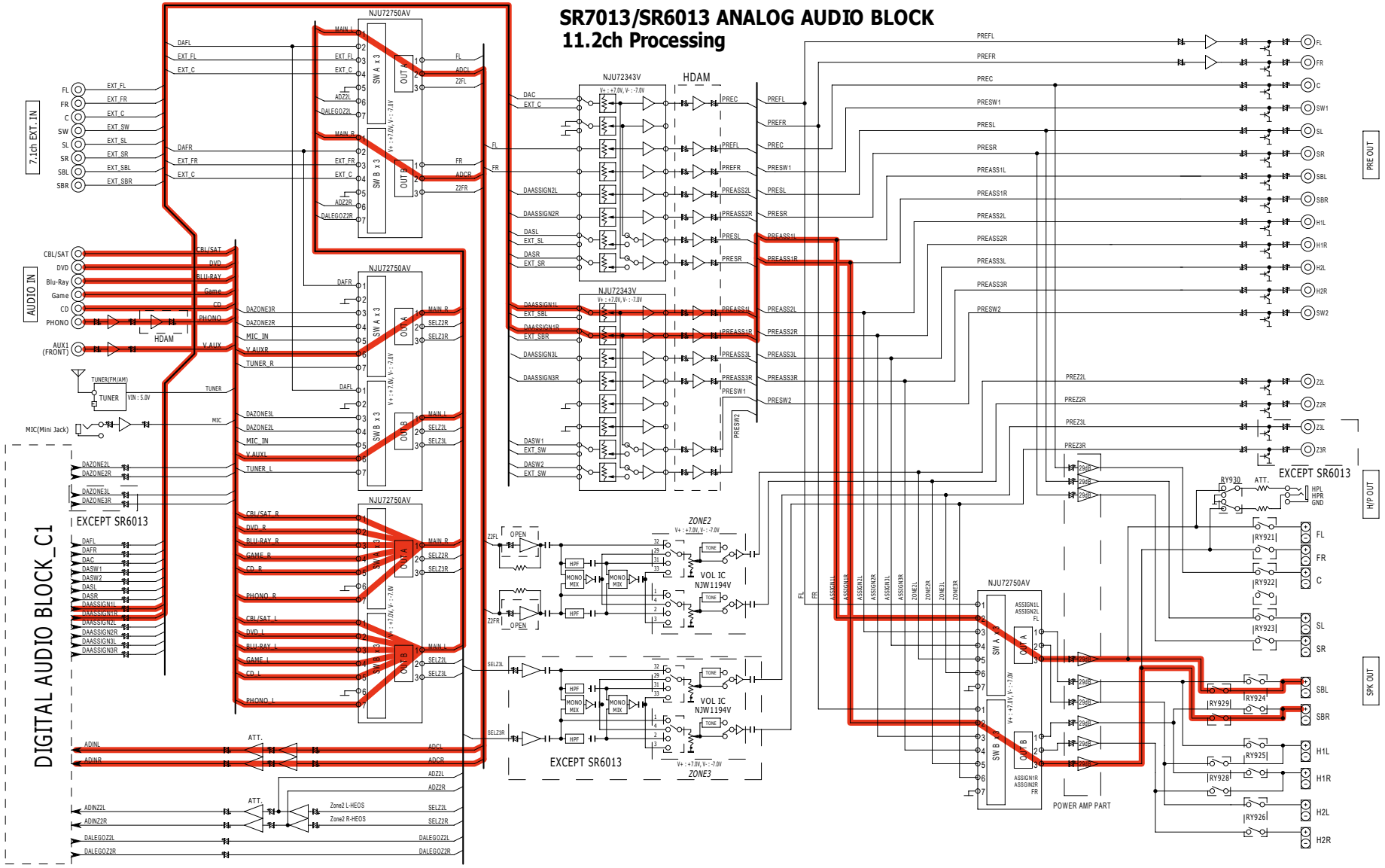
SR7013/SR6013 ANALOG AUDIO BLOCK
11.2ch Processing
DIGITAL AUDIO BLOCK_C1
7.1ch EXT. IN
AUDIO IN
NJU72750AV
NJU72343V
HDAM
VOL IC NJW1194V
ZONE2
ZONE3
EXCEPT SR6013
POWER AMP PART
PRE OUT
SPK OUT
H/P OUT
TUNER
ATT.

fig.A10b

SR6013 DIGITAL AUDIO BLOCK(CIRRUS)

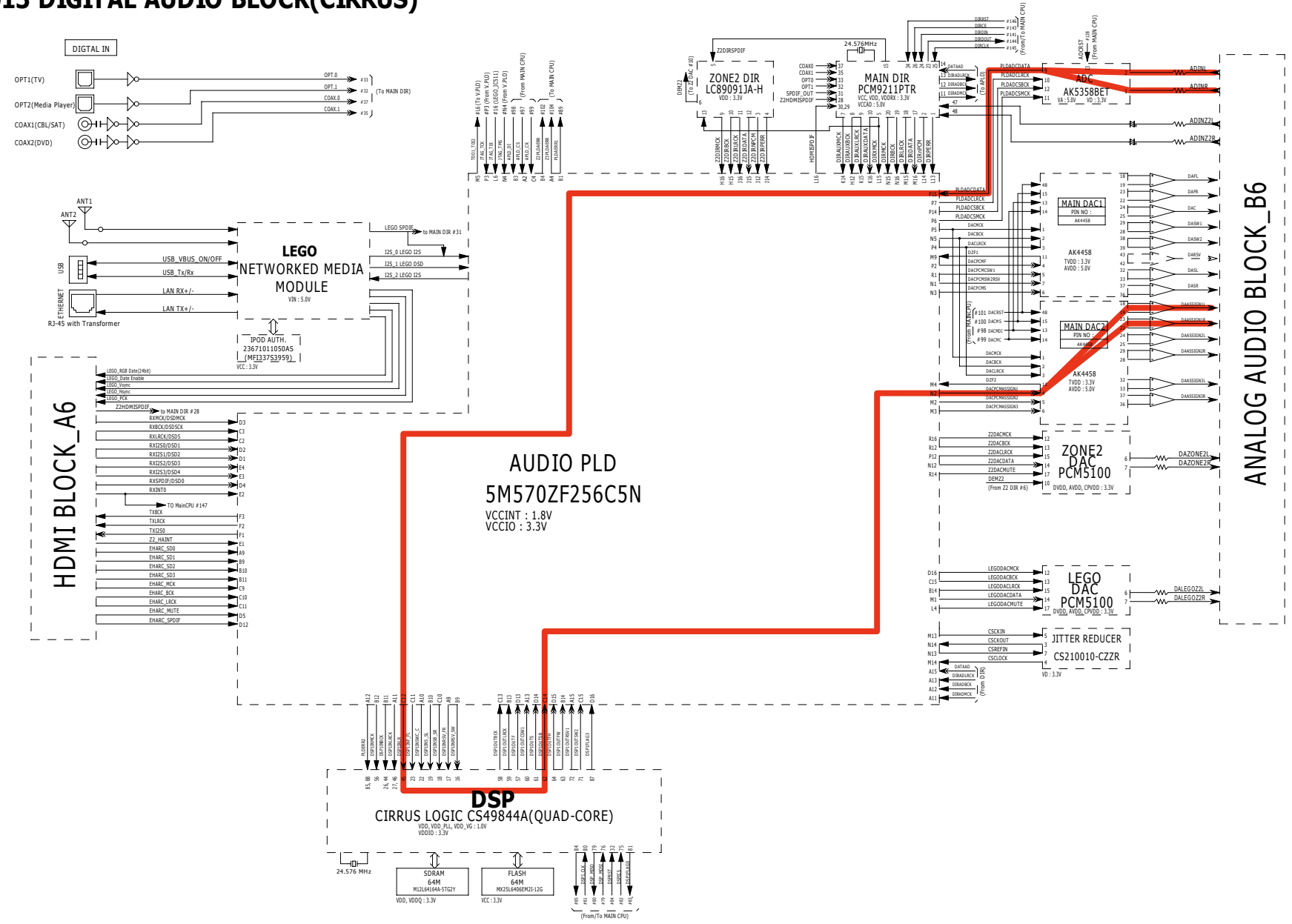

fig.V01

SR6013 ANALOG VIDEO BLOCK

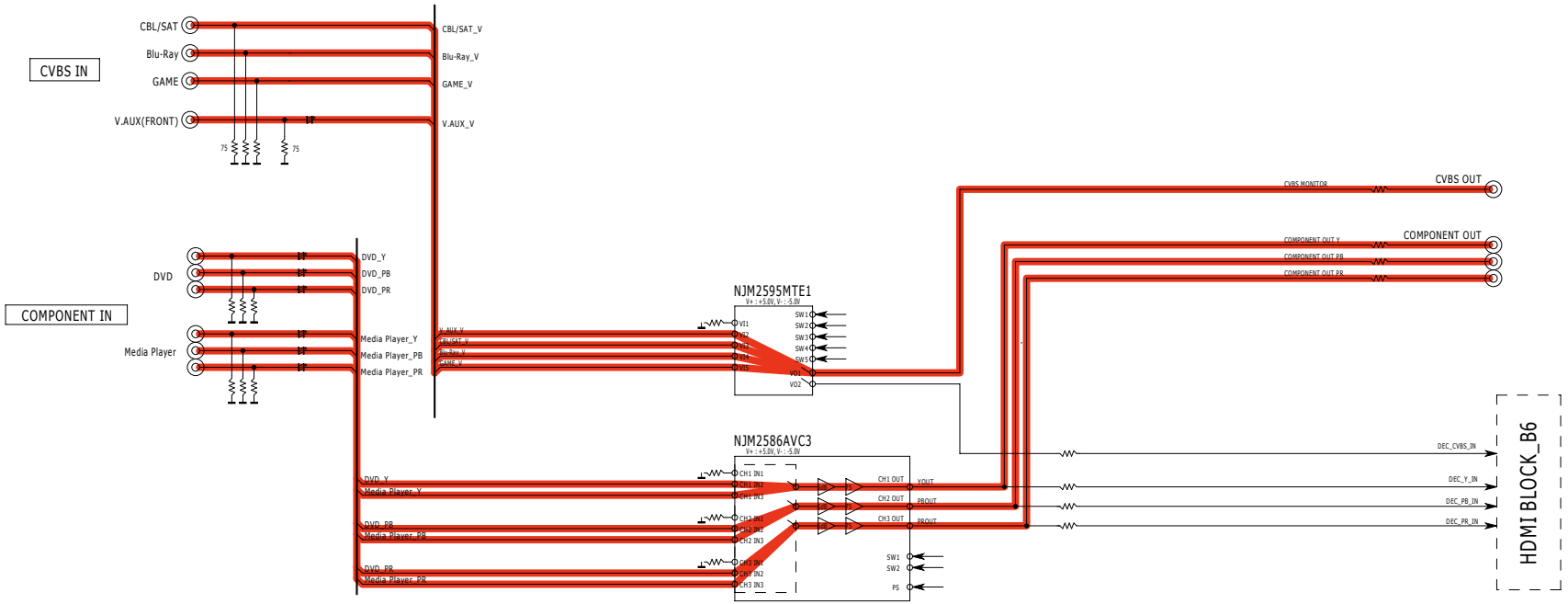

fig.V02a

SR6013 ANALOG VIDEO BLOCK

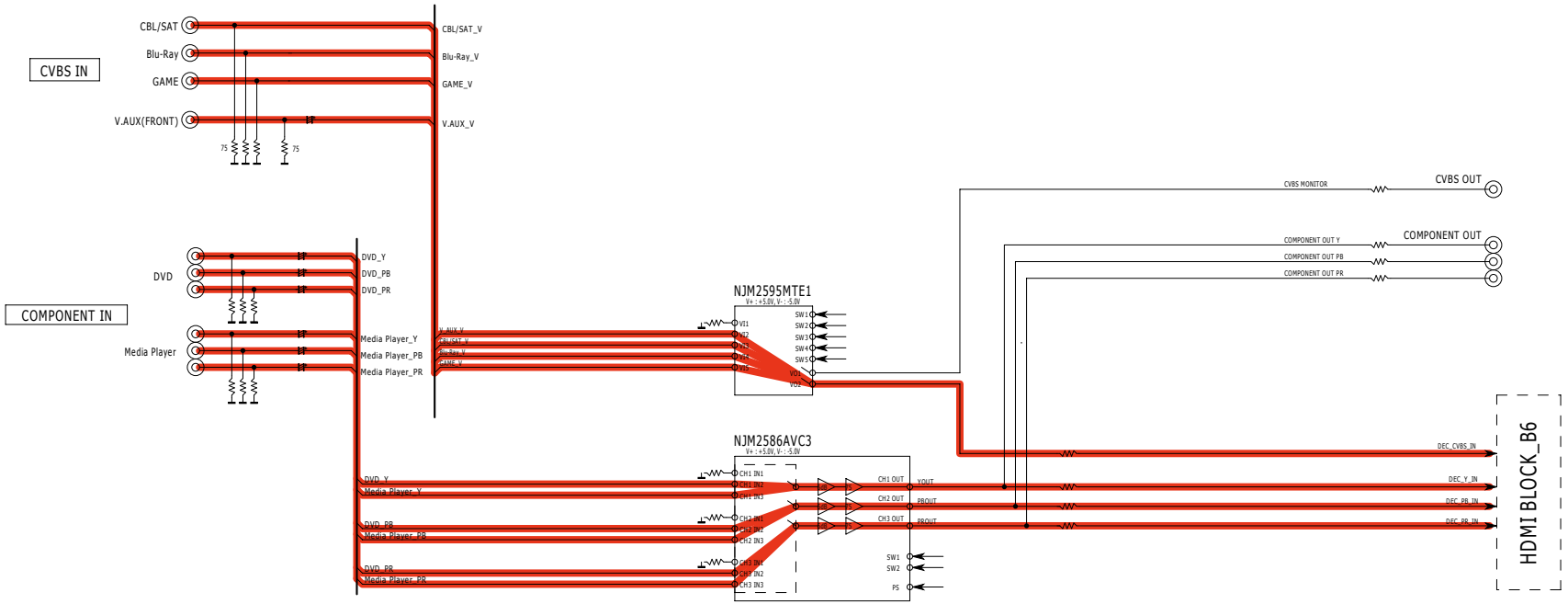

fig.V02b

SR7013/AV7705/SR6013 HDMI BLOCK

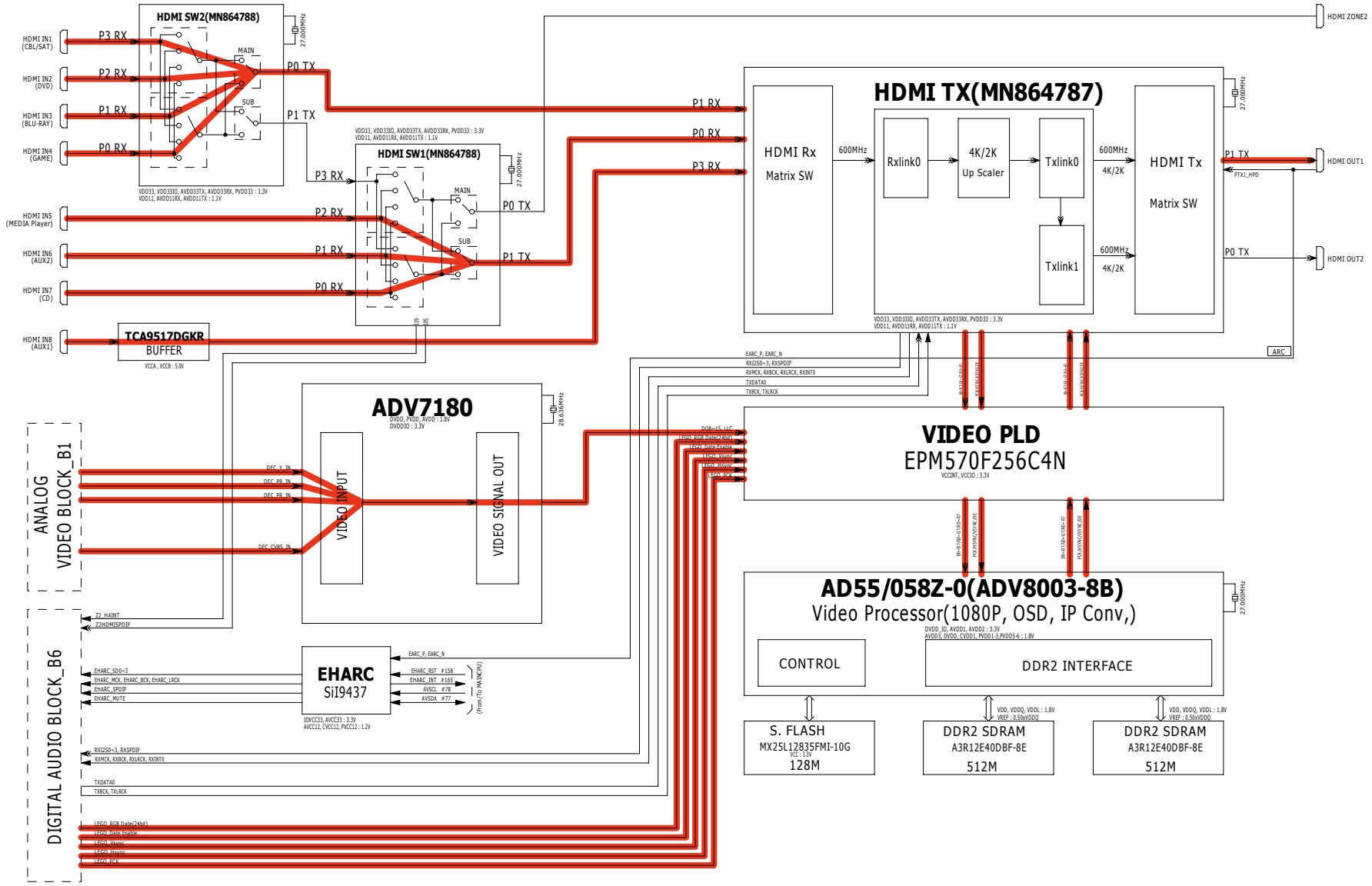

fig.V03

SR7013/AV7705/SR6013 HDMI BLOCK

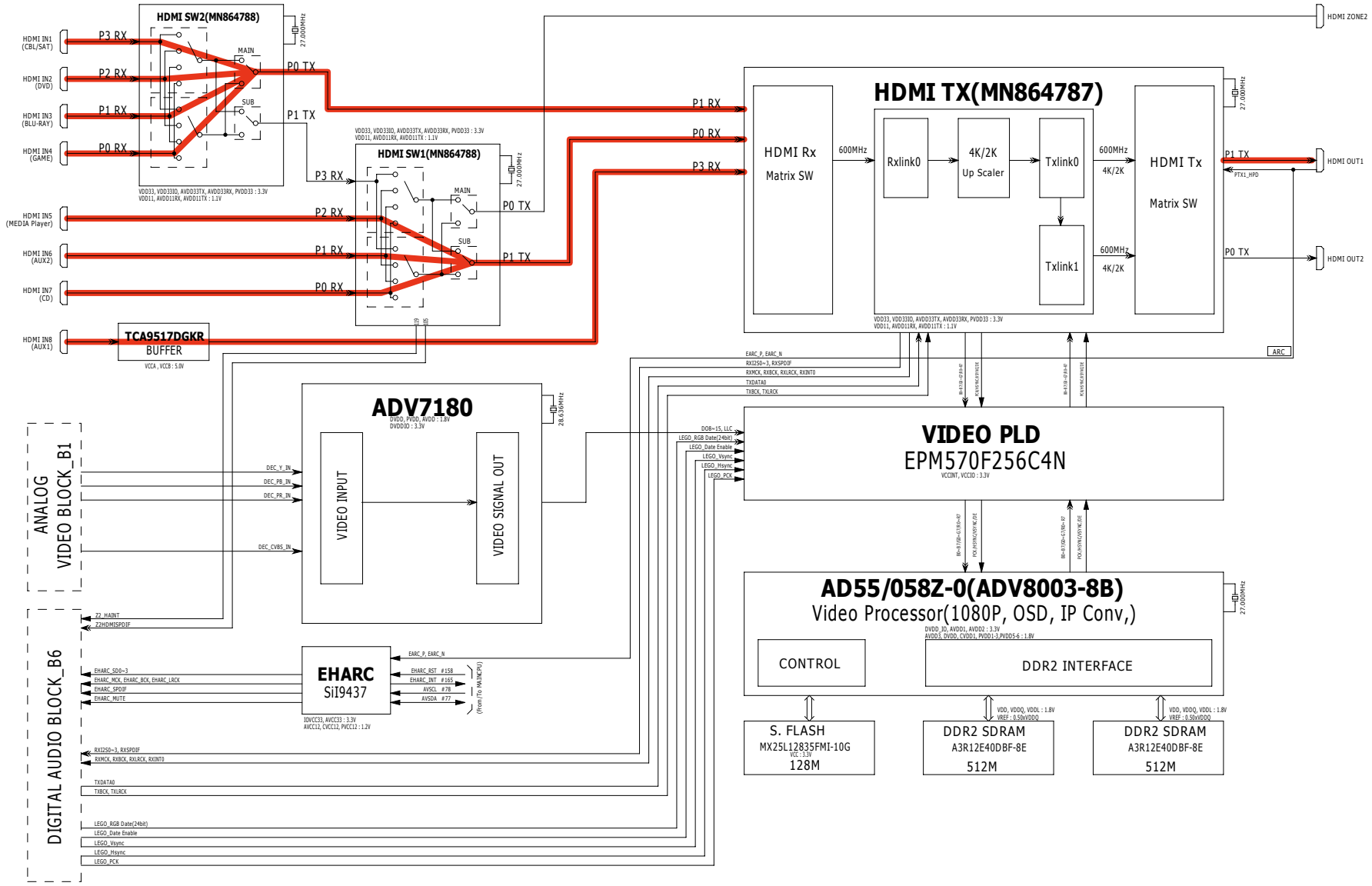

fig.V04

SR7013/AV7705/SR6013 HDMI BLOCK

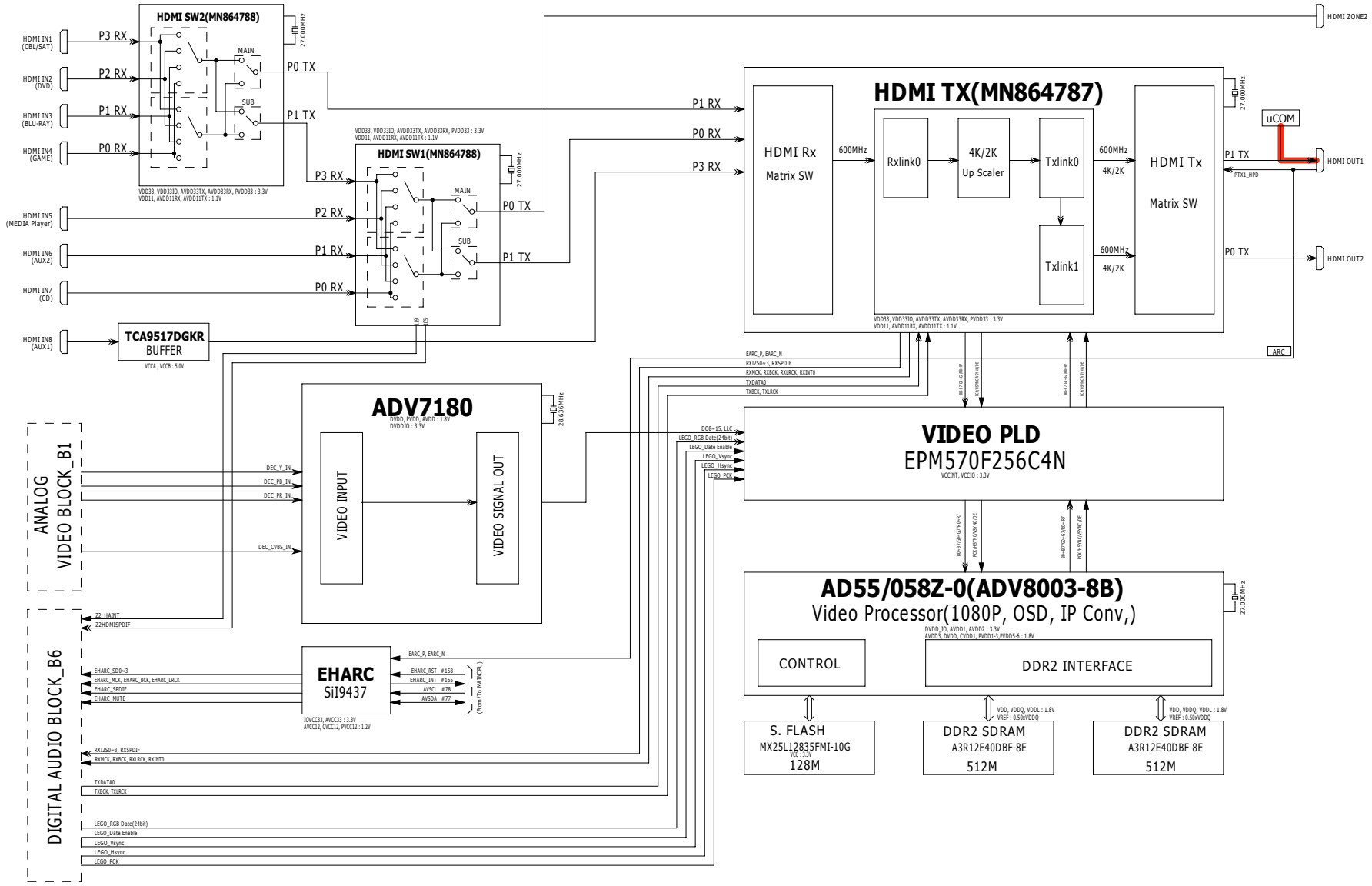

fig.V05a

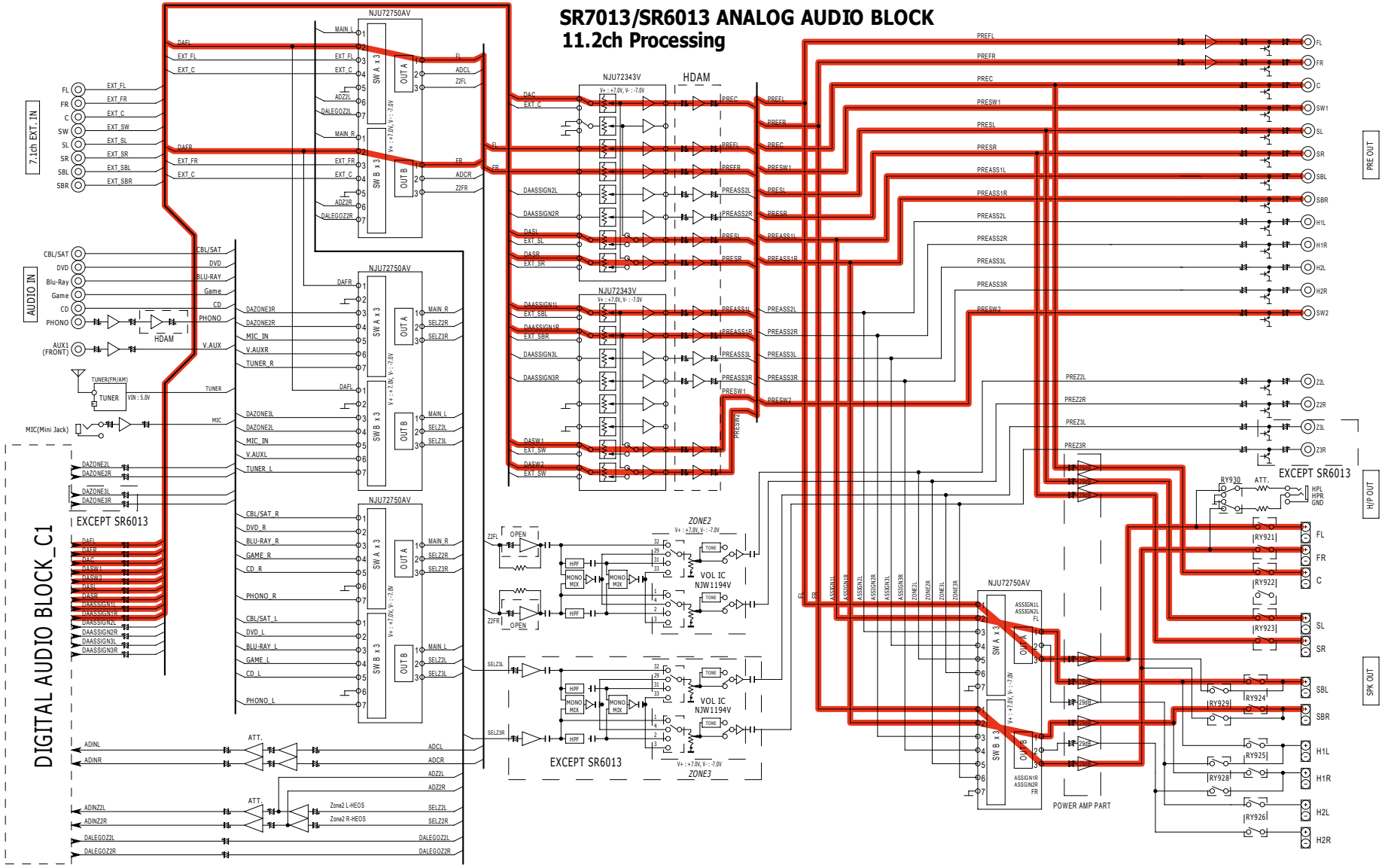
SR7013/SR6013 ANALOG AUDIO BLOCK
11.2ch Processing
DIGITAL AUDIO BLOCK_C1
7.1ch EXT. IN
AUDIO IN
NJU72750AV
NJU72343V
HDAM
VOL IC NJW1194V
ZONE2
ZONE3
EXCEPT SR6013
POWER AMP PART
PRE OUT
SPK OUT
HP OUT

fig.V05b

SR6013 DIGITAL AUDIO BLOCK(CIRRUS)

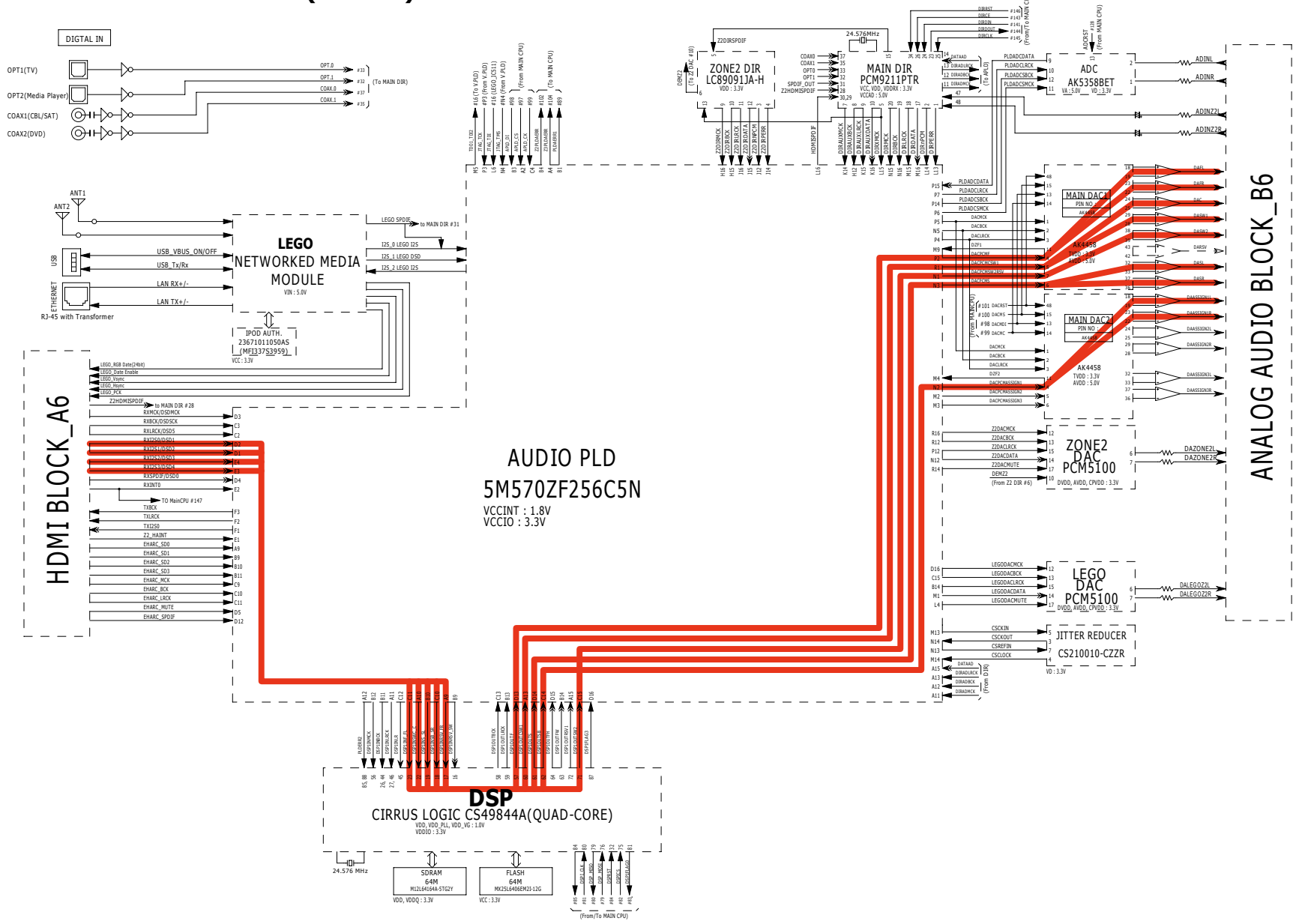

fig.V05c

SR7013/AV7705/SR6013 HDMI BLOCK

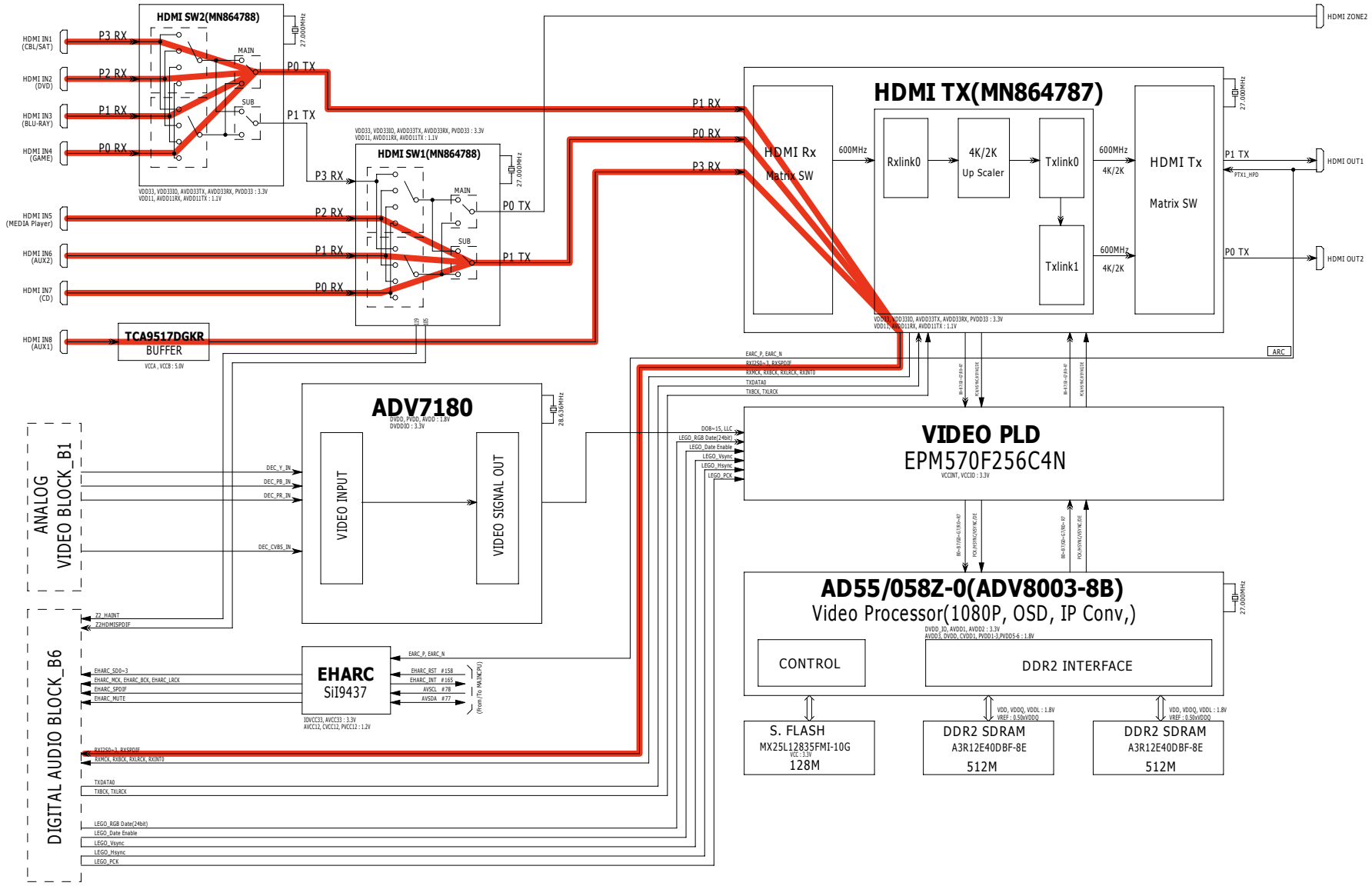

fig.V06a

SR6013 DIGITAL AUDIO BLOCK(CIRRUS)

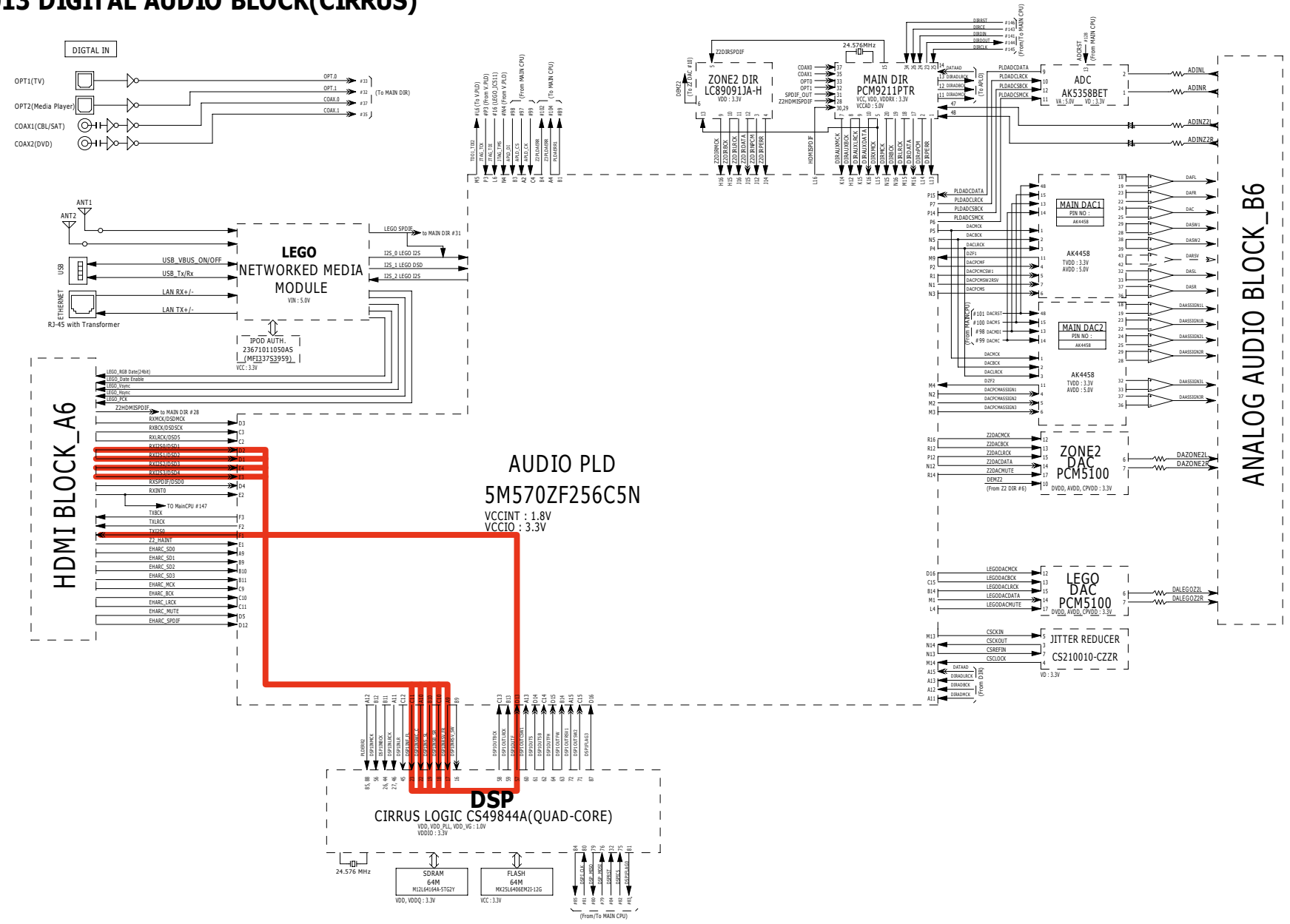

fig.V06b

SR7013/AV7705/SR6013 HDMI BLOCK

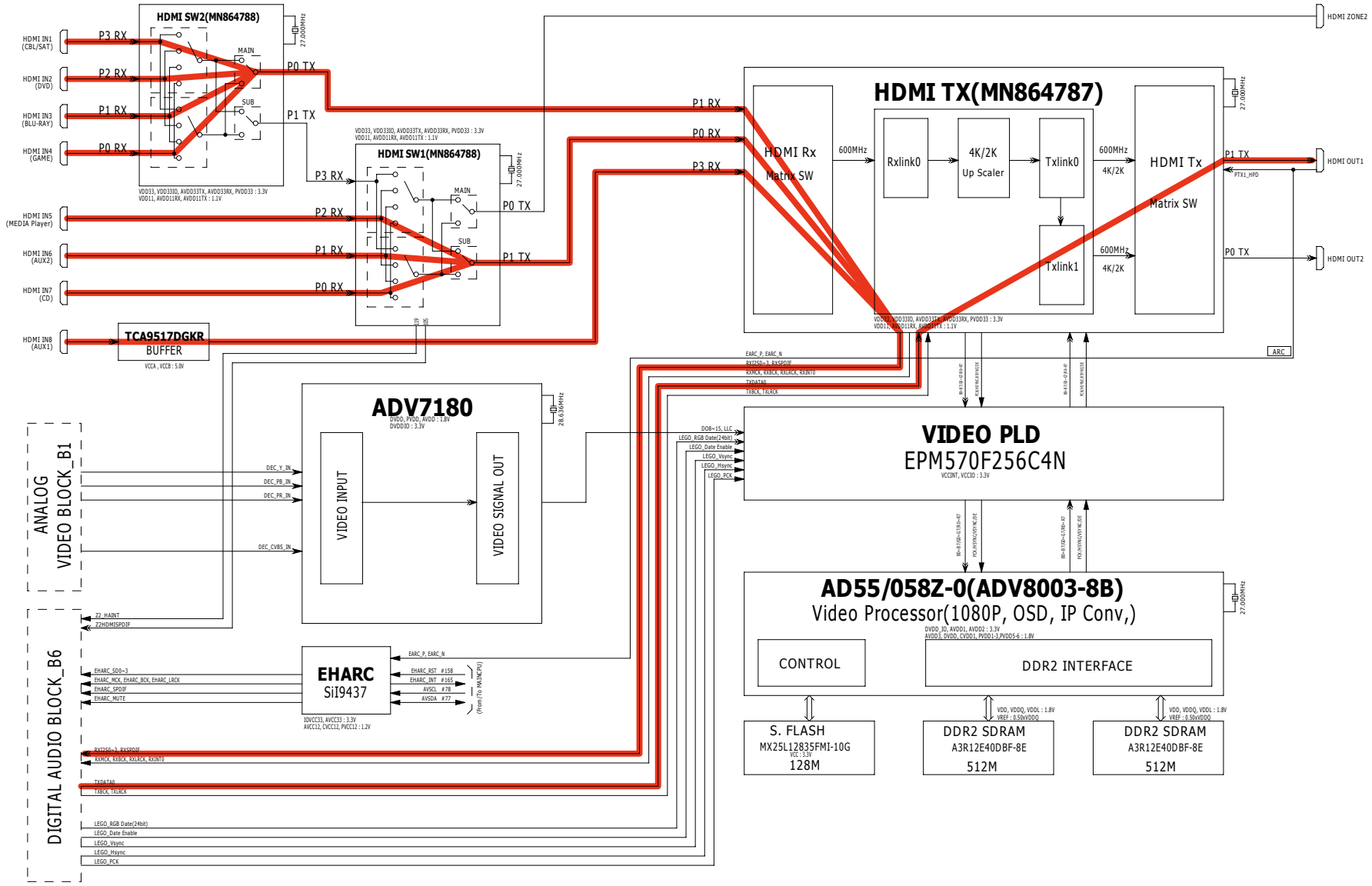

fig.V07

SR7013/AV7705/SR6013 HDMI BLOCK

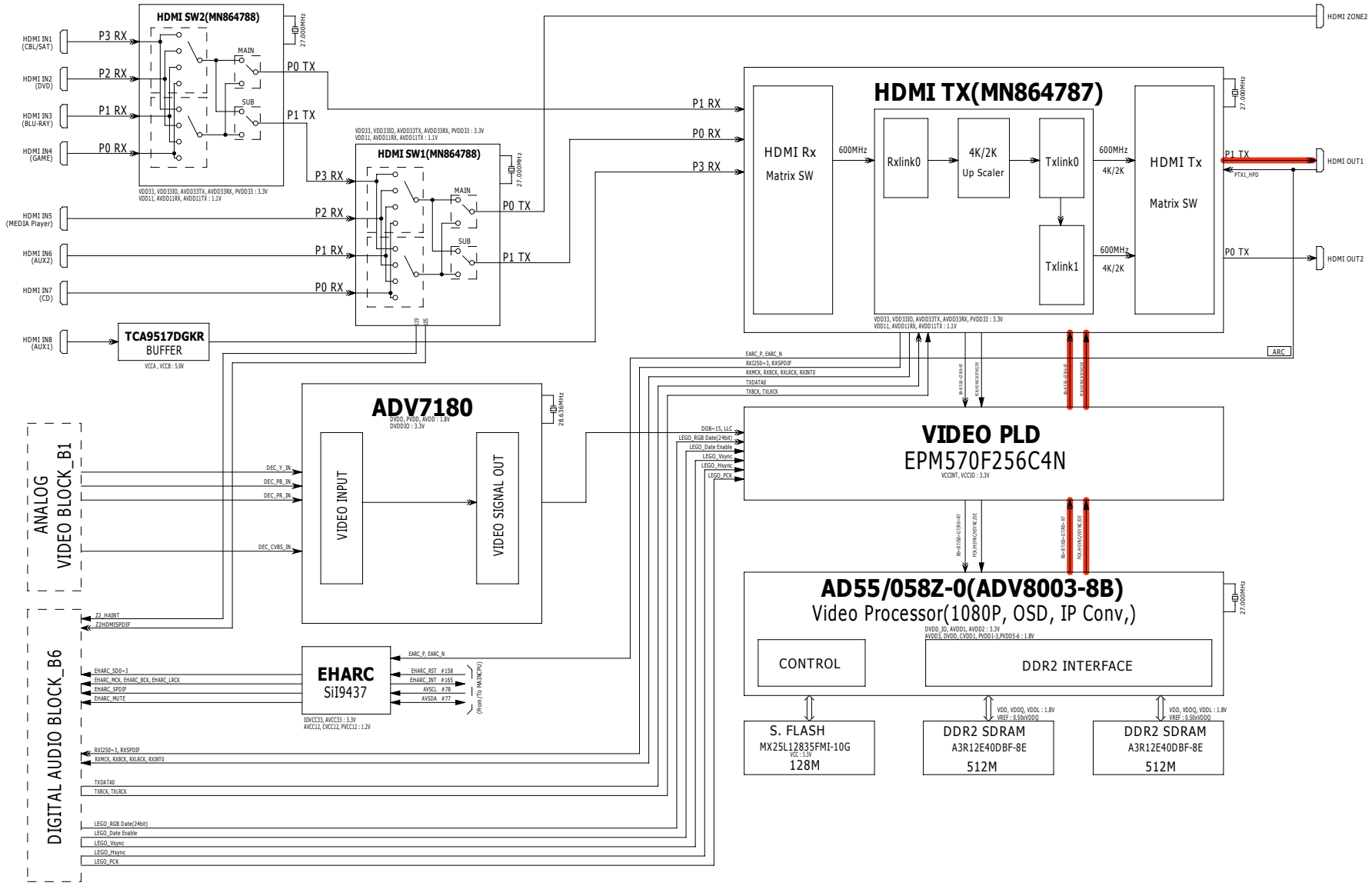

fig.V08

SR7013/AV7705/SR6013 HDMI BLOCK

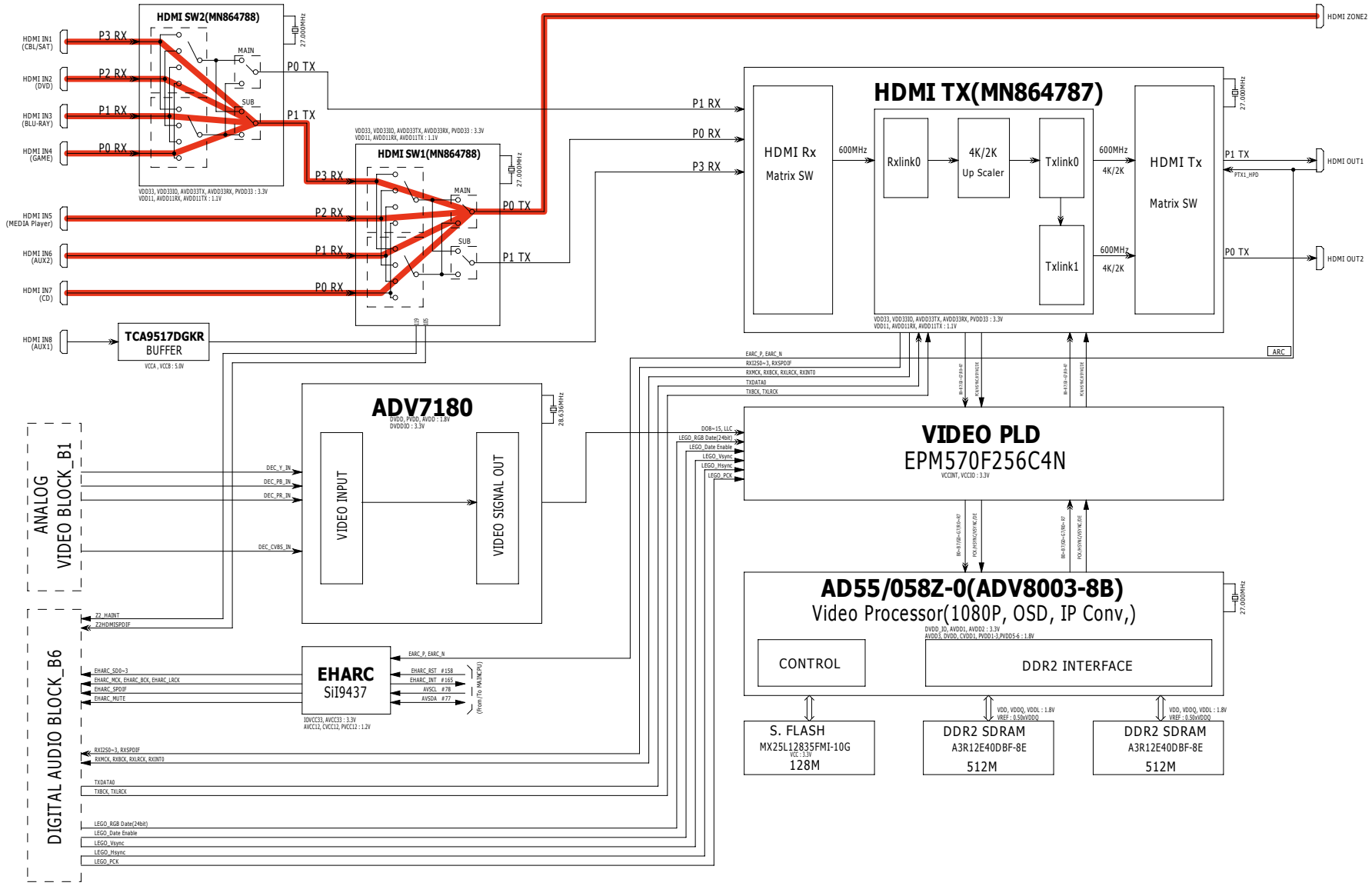

JIG FOR SERVICING

Use the following jigs (extension cable kit) when repairing the PCBs.
Order with your dealer for the jigs your dealer if necessary.

CAUTION : Incorrect connections may cause malfunction.

Connection of Jig for DIGITAL PCB
---Items to Be Prepared---

	8U-110084S	: EXTENSION UNIT KIT	: 1Set
	8U-1101365	: EXTENSION UNIT KIT	: 1 Set
⚠2	900639103810S	: JIG 29P EXTENSION CABLE	: 1 Set
	Insulation sheet (Not supplied)		: 3 sheet
	Ground lead (Not supplied)		: 3 pc

-Proceeding-

(1) Remove the screws.

(2) Remove the connector PCB.

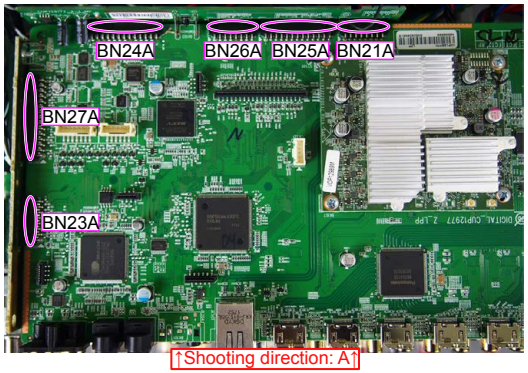

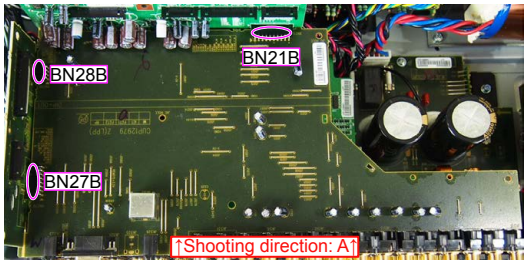

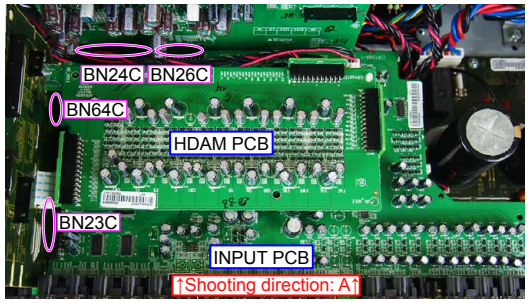

(3) Remove the DIGITAL PCB from the chassis and turn it over.
Place an insulation sheet larger than the PCB underneath the DIGITAL PCB.
※ Connect the earth of the PCB to the chassis using an earth wire, etc.

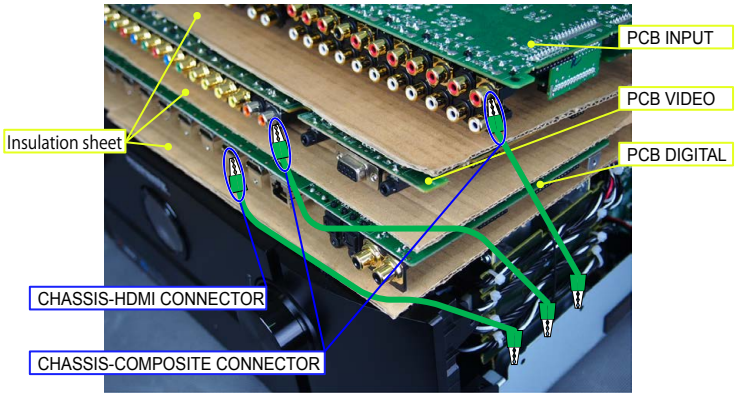

(4) Connect the expansion cables.

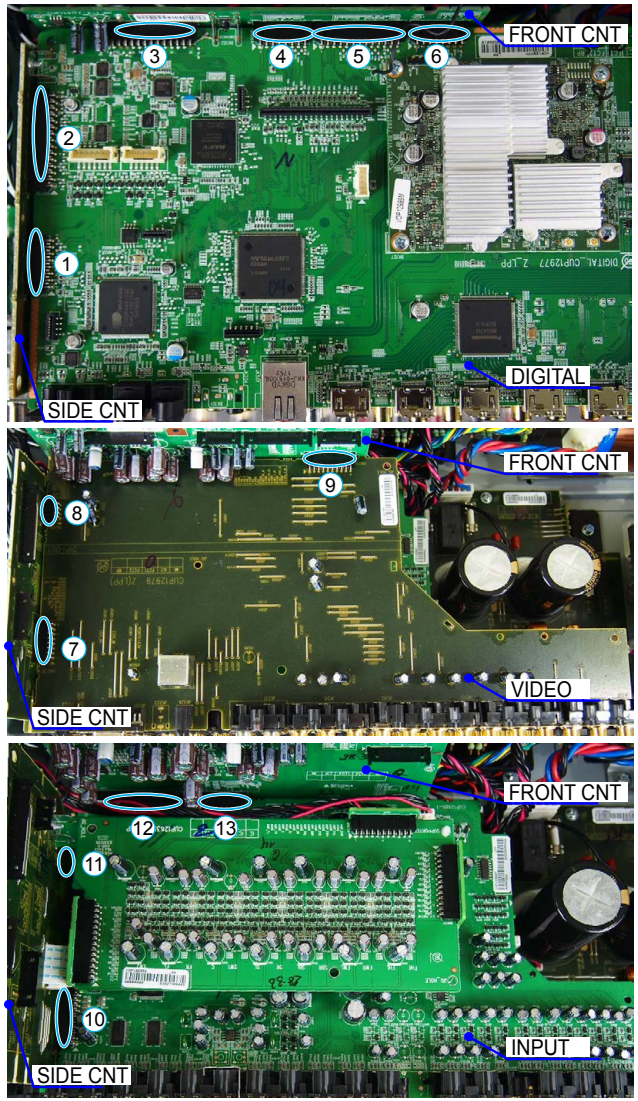

Board-to-Board Connections

No.	Pin	Ref. No.	PCB		Ref. No.	PCB
①	15pin	CN27A	SIDE CNT	⟷	BN27A	DIGITAL
②	29pin	CN23A	SIDE CNT	⟷	BN23A	DIGITAL
③	27pin	CN24A	FRONT CNT	⟷	BN24A	DIGITAL
④	15pin	CN26A	FRONT CNT	⟷	BN26A	DIGITAL
⑤	25pin	CN25A	FRONT CNT	⟷	BN25A	DIGITAL
⑥	15pin	CN21A	FRONT CNT	⟷	BN21A	DIGITAL
⑦	15pin	CN27C	SIDE CNT	⟷	BN27B	VIDEO
⑧	7pin	CN28C	SIDE CNT	⟷	BN28B	VIDEO
⑨	19pin	CN21B	FRONT CNT	⟷	BN21B	VIDEO
⑩	21pin	CN23C	SIDE CNT	⟷	BN23C	INPUT
⑪	13pin	CN64C	SIDE CNT	⟷	BN64C	INPUT
⑫	27pin	CN24C	FRONT CNT	⟷	BN24C	INPUT
⑬	21pin	CN26C	FRONT CNT	⟷	BN26C	INPUT

Adjusting Idling Current

NOTE : Adjusting the idling current when "**ECO Mode**" is set may damage the Power AMP.

1. Preparation

(1) Prepare a DC voltmeter.
(2) Place the unit under normal usage conditions, away from highly ventilated areas such as next to an air conditioning machine or electric fan.
The set requires an ambient temperature of 15℃ to 30℃ and standard humidity.
(3) Settings of This Unit
• POWER (Power source switch) STANDBY
• SPEAKER (Speaker terminal) No load
(Do not connect equipment such as speakers or dummy resistors.)

2. Adjustment Procedure

(1) Make sure that "**ECO Mode**" is off.
•Press the "**SETUP**" button on the remote control to display the GUI menu.
•Press the cursor button to select "**General**" → "**ECO**" → "**Mode**" → "**Off**".
(2) Remove the top cover and turn **VR714** (ALL Channel) of the AMP PCB counterclockwise(↺) as far as possible.
(3) Connect the DC Voltmeter to the test points.

FRONT-Lch	: CN715	: VR714
FRONT-Rch	: CN725	: VR724
CENTER ch	: CN735	: VR734
SURROUND-Lch	: CN745	: VR744
SURROUND-Rch	: CN755	: VR754
ASSIGN-2Rch	: CN765	: VR764
ASSIGN-1Rch	: CN775	: VR774
ASSIGN-2Lch	: CN785	: VR784
ASSIGN-1Lch	: CN795	: VR794

(4) Connect the power cord to an outlet. Next, press the power button to turn on the power.
(5) Set this unit as follows.
MASTER VOLUME : "---" (↺ min.) : turn counterclockwise to the lowest position.
SPEAKER (Speaker terminal) : No load
(Do not connect equipment such as speakers or dummy resistors.)
MODE : MCH STEREO
FUNCTION : DVD
(6) Turn **VR714** clockwise (↻) and adjust the voltage of the test point to "**8.0mV ± 0.5mV DC**" within 2 minutes.
(7) Check whether the voltage is within the range "**8.0mV ± 2mV DC**" 10 minutes after adjustment.
(8) Adjust the variable resistance of each channel using the same method.

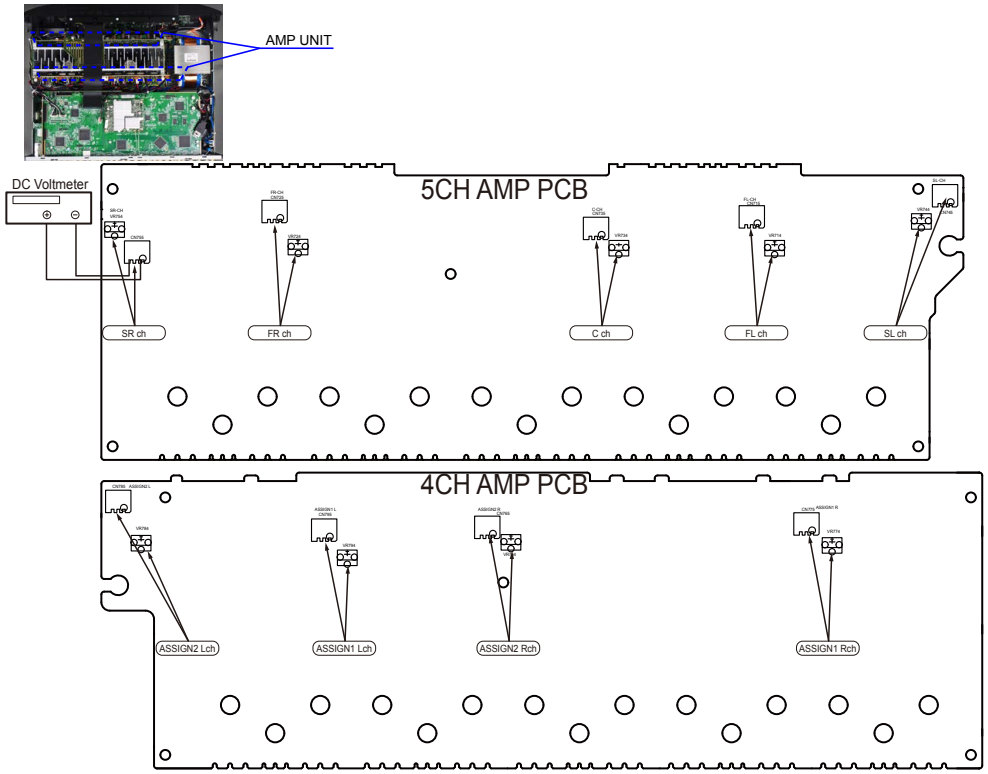

UPDATING

PROCEDURE AFTER REPLACING THE PCB.

PROCEDURE AFTER REPLACING THE U-COM, ETC.

FIRMWARE UPDATE PROCEDURE

1. Items necessary for update
2. Update preparation with a USB flash drive
3. Update method when the DIGITAL PCB or network module is replaced (Using a USB flash drive)
4. Update Method for Service Region Settings
5. Normal Firmware Update Method from USB Flash Drive
6. Normal Firmware Update Method from OTA
7. About the error codes

PROCEDURE AFTER REPLACING THE PCB.

The procedure after replacing the printed circuit boards is as follows.

(1) Change the resistor for setting the region.

Model Area	DIGITAL PCB	
	R1589	R1590
North America (U)	0	OPEN
Europe (N)	OPEN	0
China (K)	10k	10k

See the PCB below.

(2) Be sure to replace the software with the latest version.

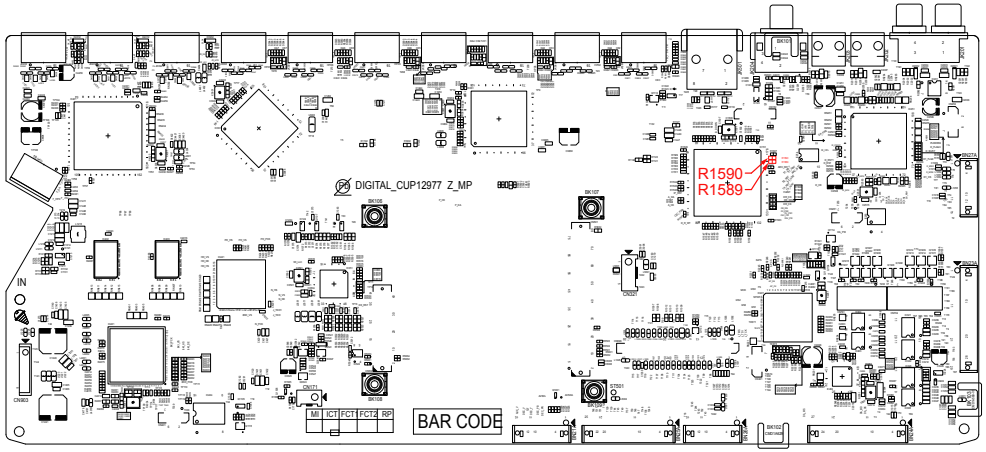

PROCEDURE AFTER REPLACING THE U-COM, ETC.

The procedure after replacing the u-COM (microprocessor), flash ROM, etc. is as follows.
Implement the update method when the DIGITAL PCB or network module is replaced.

PCB Name	Ref. No.	Description	Procedure after Re-placement	Remark
DIGITAL	IC151	R5F564MJCDFC	B	SOFTWARE : Main
DIGITAL	IC253	MX25L6406EM2I-12G	B	SOFTWARE : DSP ROM
DIGITAL	IC404	MX25L12835FMI-10G 128M	B	SOFTWARE : GUI ROM
DIGITAL	IC221	5M570ZF256C5N	C	SOFTWARE : AUDIO PLD
DIGITAL	IC421	EPM570F256C4N	B	SOFTWARE : VIDEO PLD
MODULE	C47	NETWORK MODULE	D	SOFTWARE : Network

Procedure after Replacement

A : The software has been written. The software is not written at the time of replacement.

B : The software has been written. The software may need to be rewritten by version updates. Check the version.

C : The software has not been written. The software needs to be written after replacement.
See "FIRMWARE UPDATE PROCEDURE" for information on writing the software.

D : The software has been written. Be sure to rewrite with the latest software for your service region.
See "3. Update method when the DIGITAL PCB or network module is replaced (Using a USB flash drive)" for information on rewriting the software.

FIRMWARE UPDATE PROCEDURE

1. Items necessary for update

Items necessary for update are as follows.

Update Type	Needed Part for Update	Requirement	Offered / not Offered		
			Standard Service Equipment Not offered by D&M	Purchase from D&M Article code	Download from SDI
Via USB	USB flash drive (USB 2.0 : Min 1GB) • We recommend a USB memory device that has an LED installed.	Formatting FAT16 or FAT 32	X	-	"Table 1" or "Table 2"
Via OTA	Internet Connection by Broadband Circuit	-	X	-	-
	Modem	-	X	-	-
	Router	-	X	-	-
	Ethernet cable (CAT-5 or greater is recommended)	-	X	-	-

Table 1

Update download file when the DIGITAL PCB or network module is replaced

Model Name	Model Area	Download from SDI
SR6013	ALL	avr_40.prod.update.factory.xxxx.zip

Table 2

Update download file when the firmware is updated (Two files, "HW component" and "LEGO component")

Model Name	Model Area	Download from SDI		
		For HW component		For LEGO component
SR6013 U	North America (U)	Product ID : 100100680100	DPMS_SR6013ALL_LEGO_xxxx.zip	heos_40.prod_x.xxx.xx.zip
SR6013 N	Europe (N)	Product ID : 100100680200		
SR6013 K	China (K)	Product ID : 100100680500		

2. Update preparation with a USB flash drive

You can update the firmware by downloading the latest version with USB flash drive.

2.1. Connecting to the USB flash drive

(1) Preparation

- Windows PC
- USB flash drive format : Prepare a USB flash drive formatted in FAT16 or FAT32.
  ※We recommend a USB flash drive that has an LED installed.

NOTE :

- Use a memory that supports USB2.0.
- Do not run the USB flash drive through a hub.
- Do not connect a computer to the USB port of this unit using a USB cable.
- Do not use an extension cable when connecting the USB flash drive.
- Save the update file on a blank USB flash drive for use.
- If a USB flash drive cannot be updated, replace it with a different USB flash drive and perform the update again.

2.2. Unzipping the Downloaded File

Unzip the downloaded file on your computer.

XXXXXXXXXXX	xxxxxxxxxx_xxxxxxxx.zip

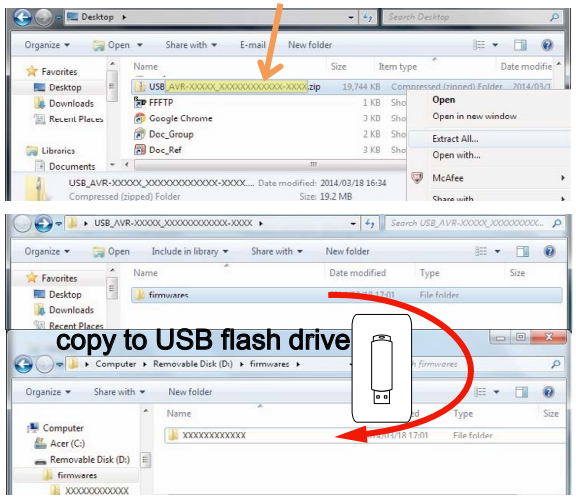

There are folders or files after unzipping.
Copy these folders or files onto the USB flash drive.
The folders or files must be placed in the root directory of the USB flash drive.

3. Update method when the DIGITAL PCB or network module is replaced (Using a USB flash drive)

3.1. File structure on USB flash drive

DIGITAL PCB or network module is replaced onto the USB flash drive in the following structure.

After unzipping the files, store them in the root of the same USB flash drive.

Model Area	Download from SDI
ALL	avr_40.prod.update.factory.xxxx.zip

USB flash drive root
+ avr_40.prod.update.factory
+ xxxxxxzz.ota-download
+ heos_40.prod.update.factory

xxxxxx : Model name
zz : Region

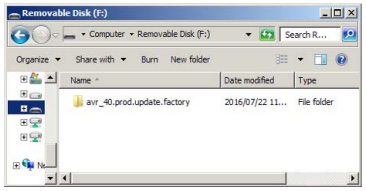

3.2. Start the update.

NOTE :
- Remove the LAN cable from this unit when updating.
  (Do not connect to a wired or wireless network.)
- The GUI menu setting details and image quality adjustment setting details are initialized when Firmware Factory Restore is performed. Therefore, take a note of the setting details beforehand and reconfigure the settings after update.

(1) Press the power button to turn on the power.
(2) Wait for this unit to start up.
(3) Set the input source to HEOS Music.
Check that the display is as shown below.
Display(Main Display)

L1	HEOS		
L2	▶TuneIn Internet Radio	or	No Network Connection

L2 : Content of the display is scrolled.

(4) Insert the USB flash drive into the USB port.

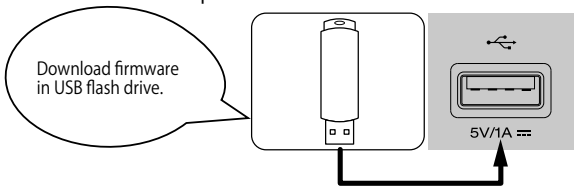

(5) USB Update starts automatically.
The Standby LED lights red.
Display during USB update (Main Display)

L1	Wait
L2	▶▶▶▶▶

↓

L1	Updating
L2	▶▶▶ xx%
L3	xxmin

↓

L1	Update
L2	Complete

It takes a maximum of approximately 25 minutes for update to complete.

(6) The unit restarts when update is complete.
※When update is complete, the folder name on the USB flash drive changes to "**avr_40.prod.update.factory.done**". To use the files again, delete the "**.done**" part.
(7) Execute Firmware Factory Restore.
While holding down buttons "**M-DAX**" and "**TUNER PRESET CH +**" simultaneously, press the power button to turn on the power.

Display during Firmware Factory Restore(Main Display)

L1	Restore
L2	FW...

↓

L1	Restore
L2	▶▶▶ xx%
L3	xxmin

↓

L1	Complete

It takes approximately 15 minutes for Firmware Factory Restore to complete.

(8) Execute Service Region Settings.
See "4. Update Method for Service Region Settings"

(9) Check that the version is the specified version. See "1. Version Display Mode"

(10) If necessary, use OTA or the USB flash drive to update the firmware to the newest version.
※We recommend using the firmware update method using OTA.
See "5. Normal Firmware Update Method from USB Flash Drive" or "6. Normal Firmware Update Method from OTA"

---Cautions on Firmware Update---

- Do not remove the USB flash drive until updating is completed.
- Do not turn off the power until updating is completed.
- It takes a maximum of approximately 25 minutes for update to complete.

Once an update is started, normal operations cannot be performed until it is completed.

4. Update Method for Service Region Settings

Copy the Service Region Settings from the USB flash drive to this unit.

4.1. Creating a Service Region Settings file

(1) Click [Start button] - [Accessories] - [notepad] on the PC to launch the notepad.

(2) Enter "**TEXT**".

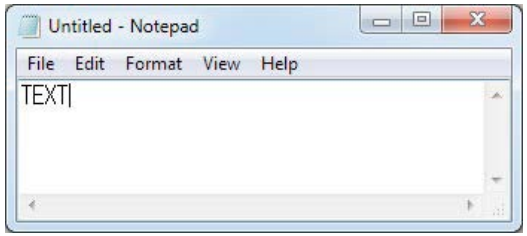

(3) Click "**File**", and then click "**Save As...**".

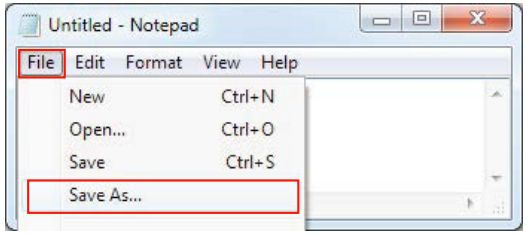

(4) Enter the file name and click the Save button.
NOTE : Enter the file name in double quotation marks. (The file extension is not required.)

Service Region	File name
North America	"denon-config-locale-set-1"
Europe	"denon-config-locale-set-2"
Japan	"denon-config-locale-set-3"
Australia	"denon-config-locale-set-4"
Korea	"denon-config-locale-set-5"
China	"denon-config-locale-set-6"
Israel	"denon-config-locale-set-7"

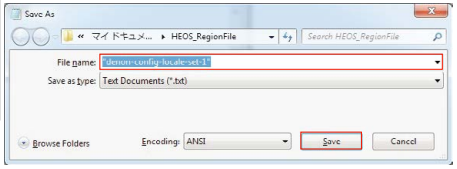

(5) Copy the files created on the USB flash drive.

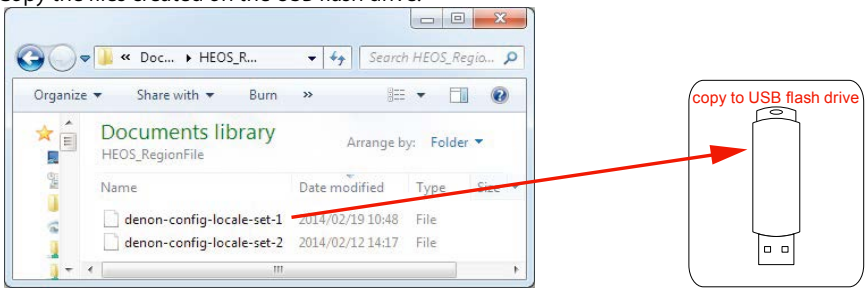

4.2. Starting Service Region Settings

NOTE :
- Remove the LAN cable from this unit when updating.
  (Do not connect to a wired or wireless network.)
- We recommend a USB memory device that has an LED installed.

(1) Press the power button to turn on the power.
(2) Wait for this unit to start up.
(3) Set the input source to HEOS Music.
Check that the display is as shown below.

Display(Main Display)

L1	HEOS	or	
L2	▶TuneIn Internet Radio		No Network Connection

L2 : Content of the display is scrolled.

(4) Insert the USB flash drive into the USB port.

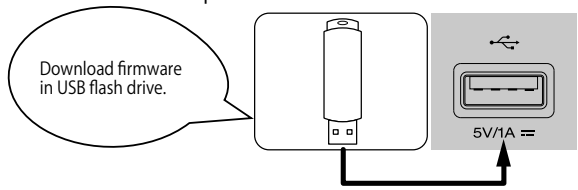

(5) Wait for at least 10 seconds before removing the USB flash drive.
(If the USB flash drive has an LED, this LED will be flashing. Remove the USB flash drive when the LED stops flashing.)

5. Normal Firmware Update Method from USB Flash Drive

5.1. File structure on USB flash drive

Copy the normal update files onto the USB flash drive in the following structure.

After unzipping the HW component USB update files for the target model and LEGO USB update files, store them in the root of the same USB flash drive.

Model Area	Download from SDI	
	For HW component	For LEGO component
North America (U)	DPMS_SR6013ALL_LEGO_xxxx.zip Product ID : 100100680100	heos_40.prod_x.xxx.xx.zip
Europe (N)	DPMS_SR6013ALL_LEGO_xxxx.zip Product ID : 100100680200	
China (K)	DPMS_SR6013ALL_LEGO_xxxx.zip Product ID : 100100680500	

USB flash drive root
+ SR6013xx_xxxx.update.auto
+ heos_40.prod.update.x-xxx-xx

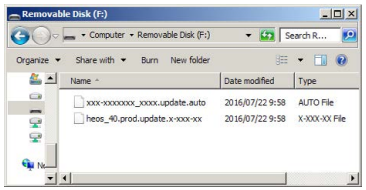

5.2. Start normal update

NOTE :
- Remove the LAN cable from this unit when updating.
  (Do not connect to a wired or wireless network.)

(1) Press the power button to turn on the power.
(2) Wait for this unit to start up.
(3) Set the input source to HEOS Music.
Check that the display is as shown below.

Display(Main Display)

L1	HEOS		
L2	▶TuneIn Internet Radio	or	No Network Connection

L2 : Content of the display is scrolled.

(4) Insert the USB flash drive into the USB port.

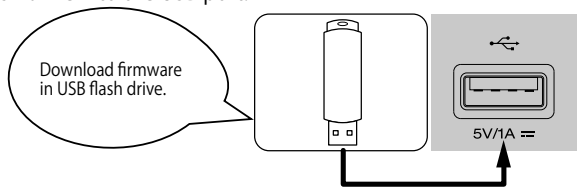

(5) USB Update starts automatically.
The Standby LED lights red.

Display during USB update (Main Display)

L1	Wait
L2	▶▶▶▶▶

↓

L1	Updating
L2	▶▶▶ xx%
L3	xxmin

↓

L1	Update
L2	Complete

It takes a maximum of approximately 25 minutes for update to complete.

(6) The unit restarts when update is complete.

(7) After updating the firmware, check the version.
See "1. Version Display Mode"

---Cautions on Firmware Update---

- Do not remove the USB flash drive until updating is completed.
- Do not turn off the power until updating is completed.
- It takes a maximum of approximately 25 minutes for update to complete.

Once an update is started, normal operations cannot be performed until it is completed.
The GUI menu settings and image adjustment settings of this unit may be initialized.
Note down the settings before updating, and set them again after updating.

6. Normal Firmware Update Method from OTA

Download the latest firmware from our website and update the firmware.

6.1. Network Connection

(1) System Requirements
- Internet Connection by Broadband Circuit
- Modem
- Router
- Ethernet cable (CAT-5 or greater is recommended)

(2) Setting

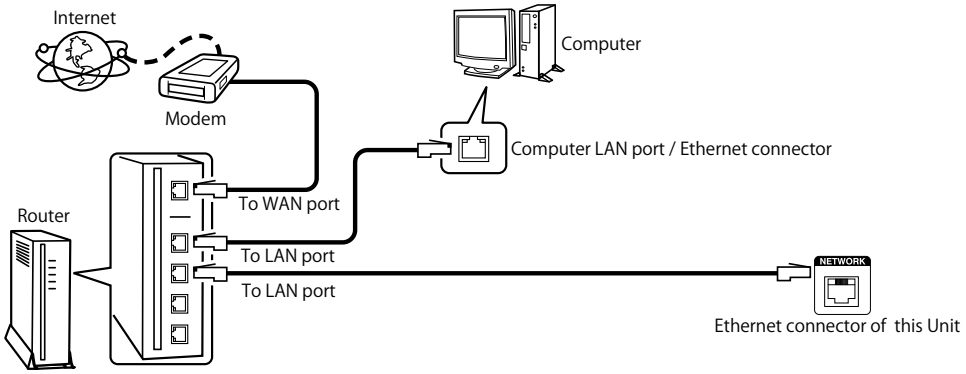

6.2. Check and update the firmware

Check if there is a firmware update available. It is also possible to check approximately how long the update will take.

(1) Press the "**SETUP**" button on the remote control to display the GUI menu.

(2) Press the cursor button to select "**General**" → "**Firmware**" → "**Check for Update**".

(3) Check update
- If the firmware version is anything other than the latest version, select "**Update Now**" to update the firmware.
- "**No update required. Latest version installed.** "is displayed when the firmware version is up to date.

(4) OTA Update starts automatically.
The Standby LED lights red.
Display during OTA update (Main Display)

L1	Wait
L2	▶▶▶▶▶

↓

L1	Updating
L2	▶▶▶ xx%
L3	xxmin

↓

L1	Update
L2	Complete

It takes a maximum of approximately 25 minutes for update to complete.

(5) The unit restarts when update is complete.

(6) After updating the firmware, check the version.
See "1. Version Display Mode"

---Cautions on Firmware Update---

- For the update procedure, a proper broadband Internet connection environment and settings are required.
- Do not turn off the power until updating is completed.
- It takes a maximum of approximately 25 minutes for update to complete.

Once an update is started, normal operations cannot be performed until it is completed.
The GUI menu settings and image adjustment settings of this unit may be initialized.
Note down the settings before updating, and set them again after updating.

7. About the error codes

See the table below for details on error codes and solutions when updating the firmware.
Error codes are displayed in 4 digits, YYXX(YY : DeviceID, XX : ErrorCode).

Display(Main Display)

L1	Updating
L2	▶▶▶ **%
L3	**min

↓

L1	Error
L2	YYXX
L3	Please check you

Update ErrorYYXX (YY : DeviceID, XX : ErrorCode)

L3 : Content of the display is scrolled.

Remedies

Error Code (YYXX) (DeviceID/ErrorCode)	Remedies
000A	"Connection failed. Please check your network, then try again."
0009	"Update failed. Please check your network, then try again."
0009	"Upgrade failed. Please check your network, then try again."
YY00 YY01 YY02 YY03 YY04 YY07	"Please check your network, unplug and reconnect the power cord, and try again."
YY00 YY01 YY02 YY03 YY04 YY07	"Please unplug and reconnect the power cord, and try again."
0005	"Incompatible update file found on the USB device. Please check the file."
0006	"Update file is corrupted. Please check the file."
000B	"Please contact customer service in your area." ※ Check the power supply and communication lines of each device.

Device ID table

Device ID (YY)	Device Name
00	General
01	Main CPU
0B	Main FBL (No used)
11	DSP1 or DSP
12	DSP2 ※ Except : NR1509/NR1609/SR5013
13	DSP3 ※ Except : NR1509/NR1609/SR5013
19	DSP4 ※ Except : NR1509/NR1609/SR5013
15	Audio PLD
22	Video PLD ※ Except : NR1509
2A	GUI
2B	PIMG ※ ONLY : NR1509/NR1609/SR5013
33	LEGO

Error Code table

Type code (XX)	Description
00	Logical error
01	Error during erasing
02	Error during writing
03	Error during verifying
04	No access for the component
05	Package mismatched. Product ID, package version un-matched of the package manifest
06	Unpack dis-available of component package file
07	Time out
08	Latest firmware has already installed.
09	Error during download
0A	Error connection
0B	Hardware Error

---Checking the Firmware Version After the Update---

After updating the firmware, check the version.
See "1. Version Display Mode"

www.marantz.com

You can find your nearest authorized distributor or dealer on our website.

marantz® is a registered trademark.

Copyright © 2018 D&M Holdings Inc. All Rights Reserved.